Simplex shaft components

Data catalogue

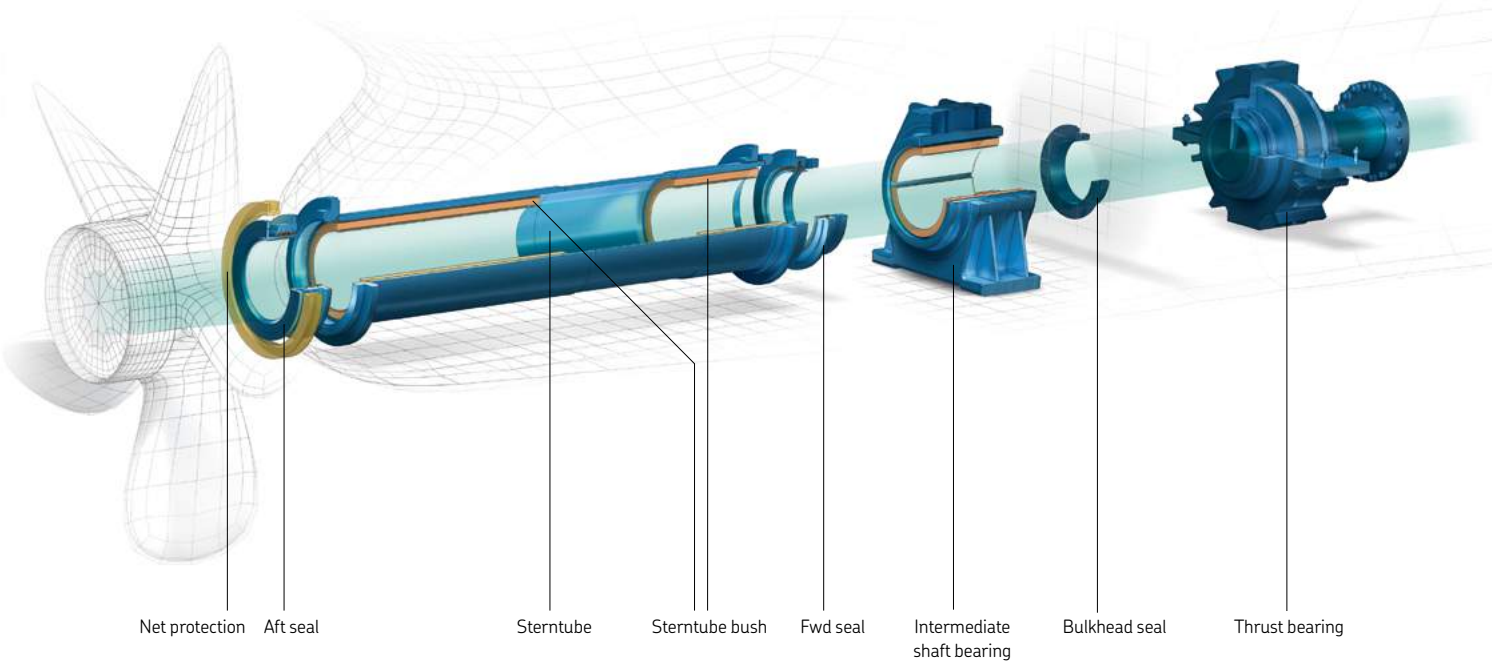
Net protection
Aft seal
Sterntube
Sterntube bush
Fwd seal
Intermediate shaft bearing
Bulkhead seal
Thrust bearing

Contents

The information contained in this data catalogue is of a general nature. Technical specifications may differ from those described here depending upon the requirements of specific applications and are subject to change without notice as a result of ongoing technical product development.

Product performance descriptions are only binding when contractually agreed.

Simplex SC3 sealing ring

The SC3 was developed to meet future demands:

- High drafts → high pressure on the seals → extended operational draft range
- Increasing environmental standards (VGP 2013) → bio-oil resistance
- Possible high temperatures at the sealing ring → best tribological behaviour reduces the thermal load
- Quick and easy maintenance

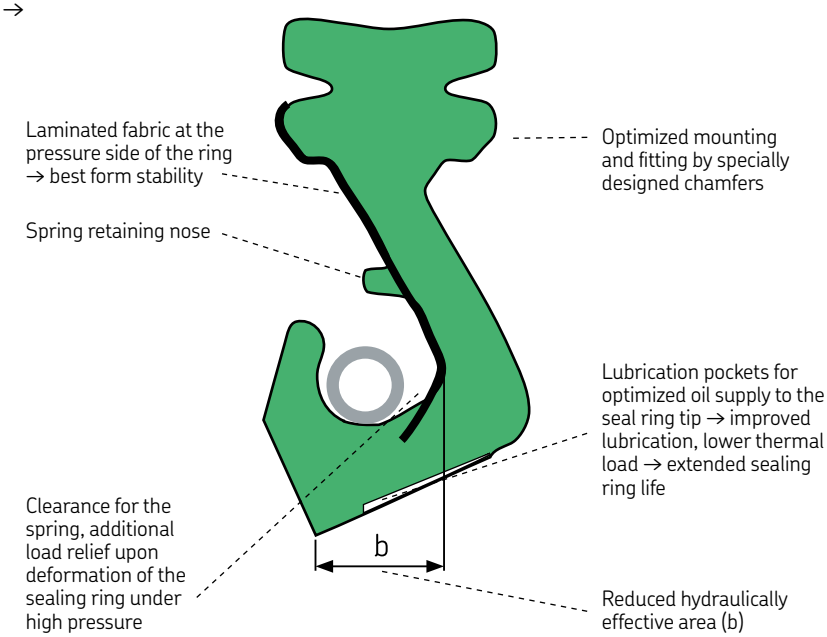

Optimal lubricating at high pressure using lubrication pockets

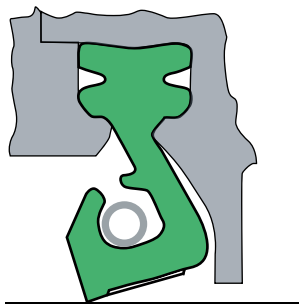

Moderate pressure load

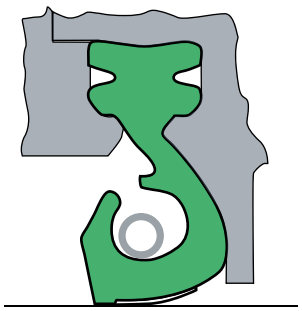

Lubrication pockets engaged under higher pressure load

Materials for different applications

The following diagram provides a guideline for selecting the right sealing ring material for Simplex lip type seals, SC3, for standard applications.

PV diagram

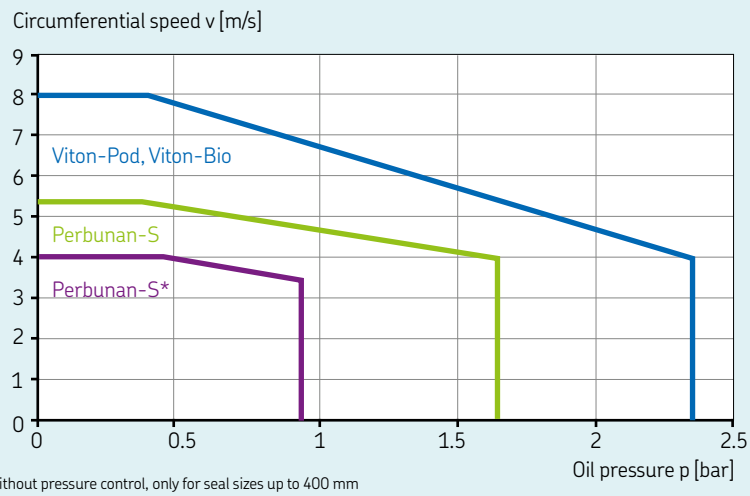

* Without pressure control, only for seal sizes up to 400 mm
Note: The above are guide values, for special applications please consult SKF Marine

The operating parameters of the Simplex seal are determined according to the following formulae:

$v = A \pi n / 60\,000$

$p = 0.1\,H + 0.25$

v = Circumferential speed of the liner [m/s]
p = Oil pressure in the sterntube [bar]
A = Seal size [mm]
H = Distance from shaft centre line to load water line [m]
n = Rotational speed [rpm]

Elastomer type	NBR	FKM	FKM
Material name	Perbunan	Viton-Pod	Viton-Bio
Laminated fabric	—	●	●
Description	Oil and seawater resistant nitrile rubber with excellent running properties.	Special fluorine rubber for applications with higher temperatures and aggressive oils, typical for Pod applications.	Fluorine rubber specially developed for use with bio-oils.

● Available/required — Not available

Simplex Basic (A), SC3 – aft seal

General description

- 3-ring sterntube seal for standard applications
- Up to seal size 400 for new-builds, larger sizes for conversions on request

Function

- A stationary housing guides the Simplex sealing rings (2 facing water/1 facing sterntube oil). The rotating liner is fixed to the propeller.
- Oil chambers I + II are initially filled with lube oil to ensure proper lubrication.
- Oil chamber I is initially filled with lube oil ensuring proper lubrication and protection from dirt.

Configuration

Housing material		Liner coating		Upgrades		Distance ring	Bio-oil compatible
Cast iron	Bronze	Ceramic	Tungsten carbide	Active circulation	Net protection	Split design	e.g. for VGP 2013
●	○	○	○	—	○	○	○

● Available/required ○ Available on request — Not available

Functional principle of sterntube lubrications

A = Header tank with level alarm
C = Tank for fwd seal with level alarm
LS = Level switch
LWL = Load water line
BWL = Ballast water line
CL = Center line

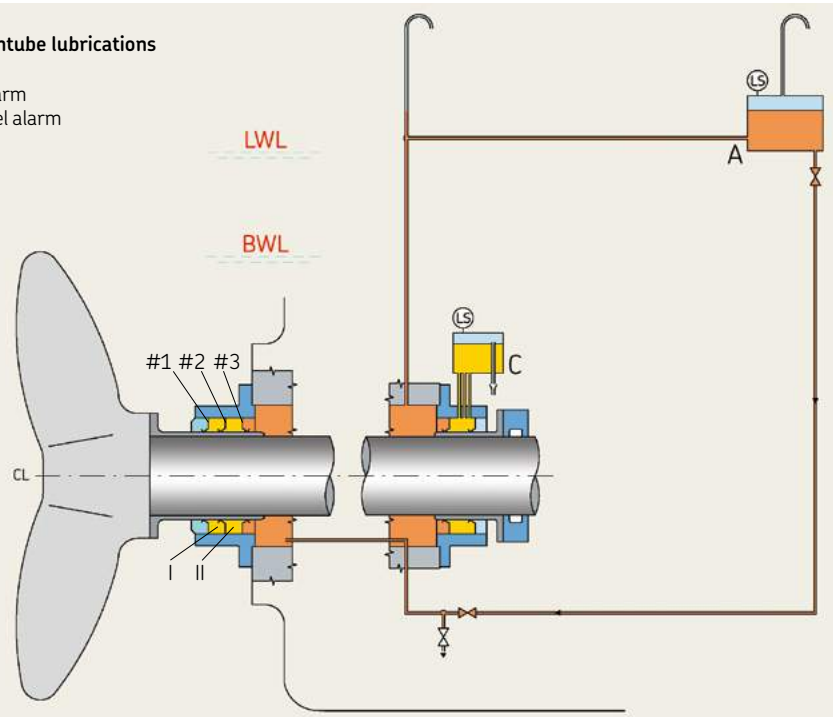

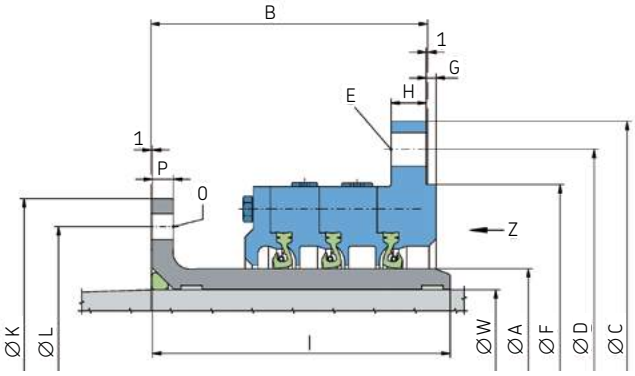

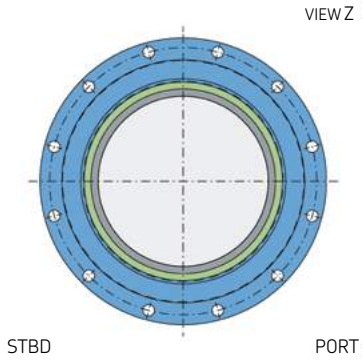

A Size	W min	W max	B 1)	C	D	E	F	G	H	I	K	L	O	P	Weight 2)
							mm							mm	kg
125	80	110	162	275	245	8 x M12	210	6	15	180	186	164	8 x M8	12	28
140	111	125	162	290	260	8 x M12	225	6	15	180	202	180	8 x M8	12	28
160	126	145	162	310	280	8 x M12	245	6	15	180	222	200	8 x M8	12	33
180	146	165	162	330	300	8 x M12	265	6	15	180	260	230	8 x M12	12	37
200	166	185	162	350	320	8 x M12	285	6	15	180	280	250	8 x M12	12	40
220	186	205	162	370	340	8 x M12	305	6	15	180	300	270	8 x M12	12	44
240	206	225	177	425	390	12 x M16	345	6	20	191	320	290	8 x M12	15	62
260	226	245	177	445	410	12 x M16	365	6	20	191	340	310	8 x M12	15	67
280	246	265	177	465	430	12 x M16	385	6	20	191	360	330	12 x M12	15	71
300	266	285	177	485	450	12 x M16	405	6	20	191	375	346	12 x M12	15	75
330	286	315	177	515	480	12 x M16	435	6	20	191	425	390	12 x M12	15	91
355	316	339	197	565	525	12 x M20	475	7	25	212	450	416	12 x M16	15	116
380	340	362	197	590	550	12 x M20	500	7	25	212	480	440	12 x M16	15	125
400	363	381	202	610	570	12 x M20	520	7	25	217	500	460	12 x M16	20	131

1) Incl. 2x1 mm packing

2) Weights may vary according to seal execution

Simplex Advanced (B), SC3 – aft seal

General description

- 3-ring sterntube seal for standard applications
- With additional pressure control of oil chamber II
- Available for dredger applications as BD version with
  - Additional sealing ring #0
  - Dimensions of the BR 4-ring seal
  - Grease in chambers I and II
  - Grease dosing unit for chamber II

Function

- A stationary housing fixes the Simplex sealing rings (2 facing seawater/1 facing sterntube oil). The rotating liner is fixed to the propeller.
- Oil chamber I is initially filled with lube oil ensuring proper lubrication and protection from dirt.
- Oil chamber II is filled with lube oil and is pressure-controlled through the respective aft seal tank (B). This independent oil supply ensures optimal lubrication.
- Condition monitoring of aft seal via oil level indication of the aft seal tank (B).
- Additional pipes to chamber II for venting and lube oil circulation.
- Oil chambers I + II are initially filled with lube oil to ensure proper lubrication.

Configuration

Housing material		Liner coating		Upgrades			Distance ring	Bio-oil compatible
Cast iron	Bronze	Ceramic	Tungsten carbide	Grease in chambers I +II (only BD)	Active circulation	Net protection	Split design	e.g. for VGP 2013
●	○	○	○	○	○	○	○	○

● Available/required ○ Available on request

Functional principle

A = Header tank with level alarm
B = Tank for aft seal with level alarm
C = Tank for fwd seal with level alarm
LS = Level switch
LWL = Load water line
BWL = Ballast water line
CL = Center line

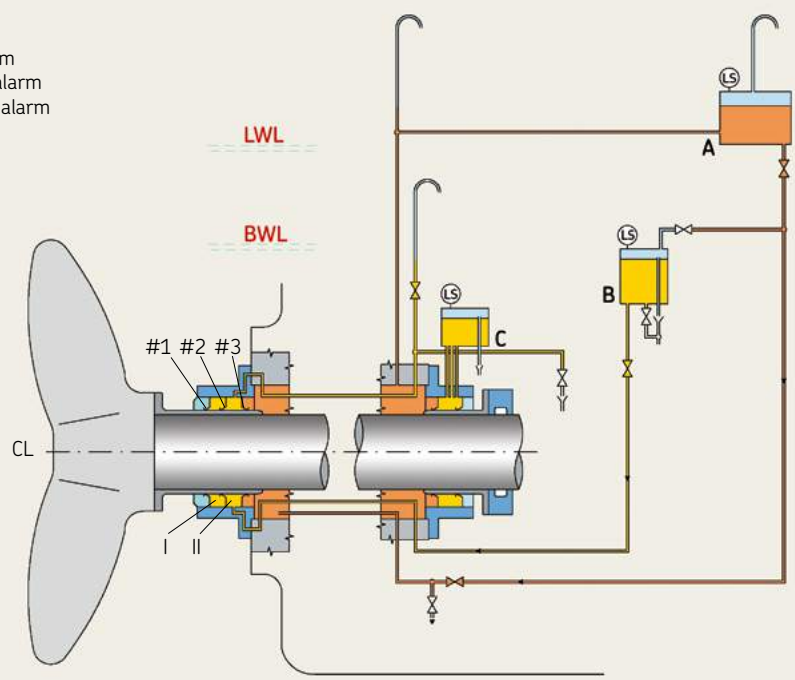

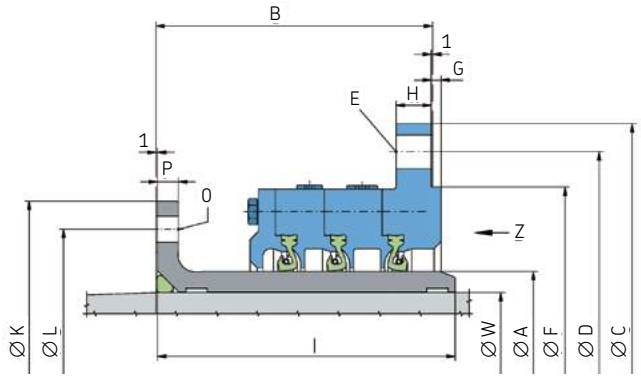

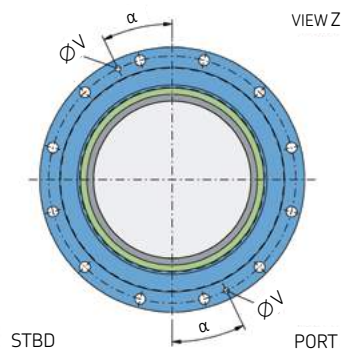

Simplex sterntube seals, oil-lubricated

A Size	W min	W max	B 1)	C	D	E	F	G	H	I	K	L	O	P	α	V	Weight 2)
mm							mm							mm			kg
125	80	110	162	275	245	8 x M12	210	6	15	180	186	164	8 x M8	12	34	8	28
140	111	125	162	290	260	8 x M12	225	6	15	180	202	180	8 x M8	12	34	8	28
160	126	145	162	310	280	8 x M12	245	6	15	180	222	200	8 x M8	12	34	8	33
180	146	165	162	330	300	8 x M12	265	6	15	180	260	230	8 x M12	12	34	8	37
200	166	185	162	350	320	8 x M12	285	6	15	180	280	250	8 x M12	12	34	8	40
220	186	205	162	370	340	8 x M12	305	6	15	180	300	270	8 x M12	12	34	8	44
240	206	225	177	425	390	12 x M16	345	6	20	191	320	290	8 x M12	15	26	8	62
260	226	245	177	445	410	12 x M16	365	6	20	191	340	310	8 x M12	15	26	8	67
280	246	265	177	465	430	12 x M16	385	6	20	191	360	330	12 x M12	15	26	8	71
300	266	285	177	485	450	12 x M16	405	6	20	191	375	346	12 x M12	15	26	8	75
330	286	315	177	515	480	12 x M16	435	6	20	191	425	390	12 x M12	15	26	8	91
355	316	339	197	565	525	12 x M20	475	7	25	212	450	416	12 x M16	15	26	8	116
380	340	362	197	590	550	12 x M20	500	7	25	212	480	440	12 x M16	15	26	8	125
400	363	381	202	610	570	12 x M20	520	7	25	217	500	460	12 x M16	20	26	8	131
420	382	400	202	630	590	12 x M20	540	7	25	217	520	486	12 x M16	20	26	8	138
450	401	428	227	675	630	12 x M20	575	8	30	241	550	510	12 x M16	20	21	12	182
480	429	457	227	705	660	12 x M20	605	8	30	241	590	550	12 x M20	20	21	12	198
500	458	476	227	725	680	12 x M20	625	8	30	241	600	560	12 x M20	20	21	12	192
530	477	504	227	755	710	12 x M20	655	8	30	241	630	590	12 x M20	20	21	12	218
560	505	532	242	820	765	12 x M24	700	9	35	253	675	630	12 x M20	20	21	12	274
600	533	570	242	860	805	12 x M24	740	9	35	253	700	660	12 x M20	20	21	12	309
630	571	598	247	890	835	12 x M24	770	9	35	258	760	710	12 x M24	25	21	12	323
670	599	635	247	930	875	12 x M24	810	9	35	258	820	750	12 x M24	25	21	12	371
710	636	672	282	990	930	16 x M24	865	10	40	301	840	790	12 x M24	25	18	12	387
750	673	710	282	1 030	970	16 x M24	905	10	40	301	885	836	16 x M24	25	18	12	503
800	711	756	312	1 090	1 030	20 x M24	960	10	40	338	945	890	16 x M24	30	14	12	634
850	757	803	312	1 140	1 080	20 x M24	1 010	10	40	338	1 000	950	16 x M24	30	14	12	687
900	804	851	332	1 200	1 135	20 x M24	1 065	11	45	362	1 070	1 010	16 x M24	35	14	12	813
950	852	896	332	1 250	1 185	20 x M24	1 115	11	45	362	1 130	1 070	16 x M24	35	14	12	869
975	897	927	332	1 300	1 235	20 x M24	1 165	11	45	362	1 170	1 110	20 x M24	35	18	12	841
1 000	928	952	332	1 300	1 235	20 x M24	1 165	11	45	362	1 170	1 110	20 x M24	35	18	12	802
1 030	953	982	356	1 400	1 325	24 x M30	1 245	11	50	381	1 230	1 170	20 x M24	35	18	15	1 007
1 060	983	1 007	356	1 400	1 325	24 x M30	1 245	11	50	381	1 230	1 170	20 x M24	35	18	15	988
1 090	1 008	1 032	356	1 460	1 385	24 x M30	1 305	11	50	381	1 300	1 230	20 x M30	40	18	15	1 107
1 120	1 033	1 056	356	1 460	1 385	24 x M30	1 305	11	50	381	1 300	1 230	20 x M30	40	18	15	1 109
1 180	1 057	1 116	356	1 520	1 445	24 x M30	1 365	11	50	381	1 360	1 290	24 x M30	40	15	15	1 347
1 250	1 117	1 186	372	1 595	1 520	24 x M30	1 440	12	50	406	1 430	1 360	24 x M30	40	15	15	1 555

1) Incl. 2x1 mm packing

2) Weights may vary according to seal execution

Simplex Basic + Advanced, split design (E + BE), SC3 – aft seal

General description

- 3-ring sterntube seal for standard applications
  - Simplex Basic (E) without pressure control
  - Simplex Advanced (BE) for all shaft diameters with additional pressure control of oil chamber II
- Liner and housing are axially split
- Available for dredger applications as BDE version with
  - Additional sealing ring #0
  - Dimensions of the BRE four-ring seal
  - Grease in chambers I and II
  - Grease dosing unit for chamber II

Function

- A stationary housing fixes the Simplex sealing rings (2 facing seawater/1 facing sterntube oil). The rotating liner is fixed to the propeller.
- Oil chamber I is initially filled with lube oil ensuring proper lubrication and protection from dirt.
- Oil chamber II of the Simplex Advanced (BE) aft seal is filled with lube oil and is pressure-controlled through the respective aft seal tank (B). This independent oil supply ensures optimal lubrication.
- Condition monitoring for the Simplex Advanced (BE) aft seal via oil level indication of the aft seal tank (B).
- Additional pipes to the Simplex Advanced (BE) aft seal chamber II for venting and lube oil circulation.

Configuration

Split variations		Housing material		Liner coating		Upgrades			Distance ring	Bio-oil compatible
Split liner / Non-split housing	Split housing / Non-split liner	Cast iron	Bronze	Ceramic	Tungsten carbide	Grease in chambers I + II (only BDE)	Active circulation	Net protection	Split design	e.g. for VGP 2013
○	○	●	○	—	—	○	○	○	○	○

● Available/required ○ Available on request — Not available

Functional principle

A = Header tank with level alarm
B = Tank for aft seal with level alarm
C = Tank for fwd seal with level alarm
LS = Level switch
LWL = Load water line
BWL = Ballast water line
CL = Center line

The oil circuit diagram shows the Simplex Advanced sterntube seal with pressure control (tank B)

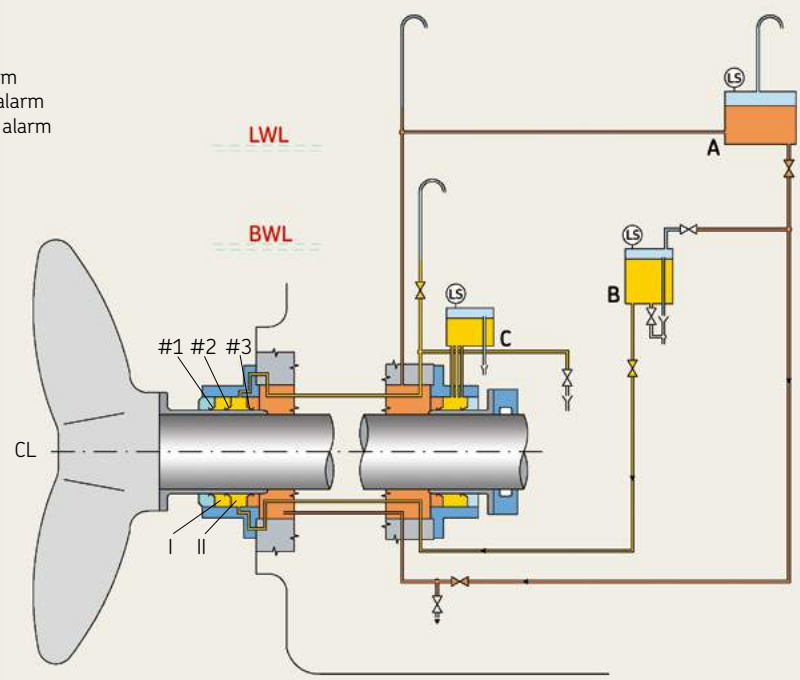

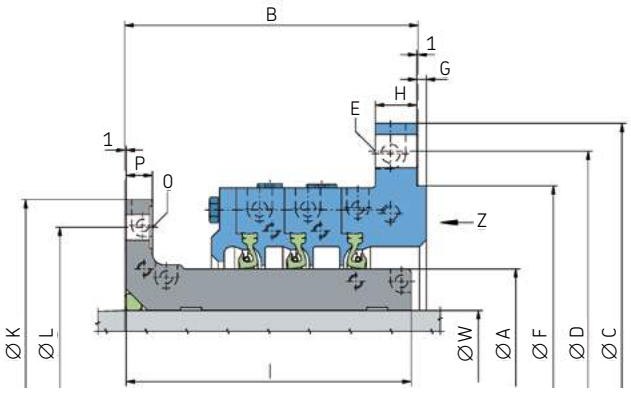

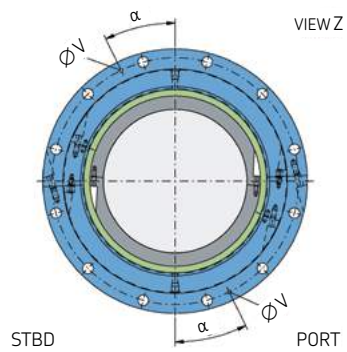

A Size	W min	W max	B 1)	C	D	E	F	G	H	I	K	L	O	P	α	V	Weight 2)
mm							mm							mm			kg
140	90	104	177	290	260	8 x M12	225	6	23	173	202	180	8 x M8	14	34	8	37
160	105	124	177	310	280	8 x M12	245	6	23	173	222	200	8 x M8	14	34	8	42
180	125	144	177	330	300	8 x M12	265	6	23	173	260	230	8 x M12	18	34	8	49
200	145	164	177	350	320	8 x M12	285	6	23	173	280	250	8 x M12	18	34	8	54
220	165	184	177	370	340	8 x M12	305	6	23	173	300	270	8 x M12	18	34	8	59
240	185	204	192	425	390	12 x M16	345	6	24	187	320	290	8 x M12	19	26	8	79
260	205	224	192	445	410	12 x M16	365	6	24	187	340	310	8 x M12	19	26	8	85
280	225	244	192	465	430	12 x M16	385	6	24	187	360	330	12 x M12	19	26	8	91
300	245	264	192	485	450	12 x M16	405	6	24	187	375	346	12 x M12	19	26	8	96
330	265	294	192	515	480	12 x M16	435	6	24	187	425	390	12 x M12	19	26	8	113
355	295	319	212	565	525	12 x M20	475	7	30	206	450	416	12 x M16	19	26	8	145
380	320	344	212	590	550	12 x M20	500	7	30	206	480	440	12 x M16	19	26	8	155
400	345	364	217	610	570	12 x M20	520	7	30	211	500	460	12 x M16	19	26	8	159
420	365	384	217	630	590	12 x M20	540	7	30	211	520	486	12 x M16	19	26	8	166
450	385	415	242	675	630	12 x M20	575	8	30	235	550	510	12 x M16	22	21	12	212
480	416	445	242	705	660	12 x M20	605	8	30	235	590	550	12 x M20	22	21	12	225
500	446	464	242	725	680	12 x M20	625	8	30	235	600	560	12 x M20	22	21	12	220
530	465	494	242	755	710	12 x M20	655	8	30	235	630	590	12 x M20	22	21	12	246
560	495	523	257	820	765	12 x M24	700	9	35	250	675	630	12 x M20	25	21	12	308
600	524	558	257	860	805	12 x M24	740	9	35	250	700	660	12 x M20	25	21	12	342
630	559	588	262	890	835	12 x M24	770	9	35	255	760	710	12 x M24	25	21	12	360
670	589	628	262	930	875	12 x M24	810	9	35	255	820	750	12 x M24	25	21	12	406
710	629	662	282	990	930	16 x M24	865	10	40	275	840	790	12 x M24	27	18	12	491
750	663	702	282	1 030	970	16 x M24	905	10	40	275	885	836	16 x M24	27	18	12	532
800	703	752	312	1 090	1 030	20 x M24	960	10	40	303	945	890	16 x M24	34	14	12	661
850	753	801	312	1 140	1 080	20 x M24	1 010	10	40	303	1 000	950	16 x M24	34	14	12	703
900	802	851	332	1 200	1 135	20 x M24	1 065	11	45	320	1 070	1 010	16 x M24	36	14	12	817
950	852	901	332	1 250	1 185	20 x M24	1 115	11	45	320	1 130	1 070	16 x M24	36	14	12	866
1 000	902	950	332	1 300	1 235	20 x M24	1 165	11	45	320	1 170	1 110	20 x M24	36	18	12	904

1) Incl. 2x1 mm packing

2) Weights may vary according to seal execution

Simplex Multisafe (M), SC3 – aft seal

General description

- 4-ring sterntube seal system for additional protection of seawater against oil pollution
- 2 sealing rings facing sterntube oil

Function

- A stationary housing fixes the Simplex sealing rings (2 facing seawater/2 facing sterntube oil). The rotating liner is fixed to the propeller.
- Oil chamber I is initially filled with lube oil ensuring optimal lubrication and protection from dirt.
- Oil chambers II + III are filled with lube oil and is pressure-controlled through the respective aft seal tank (B). This independent oil supply ensures optimal lubrication.
- Oil chambers II + III are connected to the aft seal tank (B) for equal pressure setting. Thus spare sealing ring #3R runs without load under normal operating conditions. If sealing ring #3 becomes damaged, spare ring #3R can be activated by closing the shut off valve in the oil supply and vent line.
- Condition monitoring of aft seal via oil level indication of the aft seal tank (B).
- Additional pipes to seal chambers II + III for venting and lube oil circulation.

Configuration

Housing material		Liner coating		Upgrades		Distance ring	Bio-oil compatible
Cast iron	Bronze	Ceramic	Tungsten carbide	Active circulation	Net protection	Split design	e.g. for VGP 2013
●	○	○	○	○	○	○	○

● Available/required ○ Available on request

Functional principle

A = Header tank with level alarm
B = Tank for aft seal with level alarm
C = Tank for fwd seal with level alarm
LS = Level switch
LWL = Load water line
BWL = Ballast water line
CL = Center line

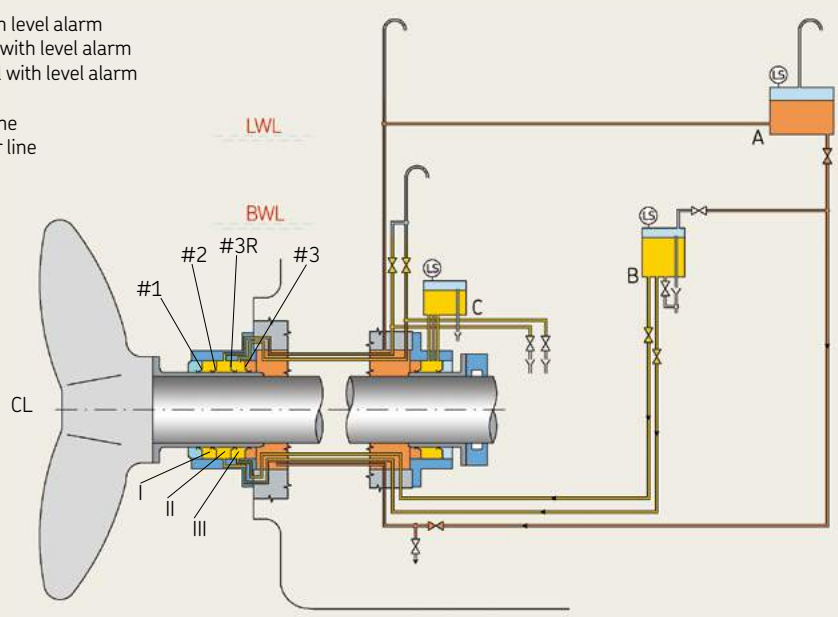

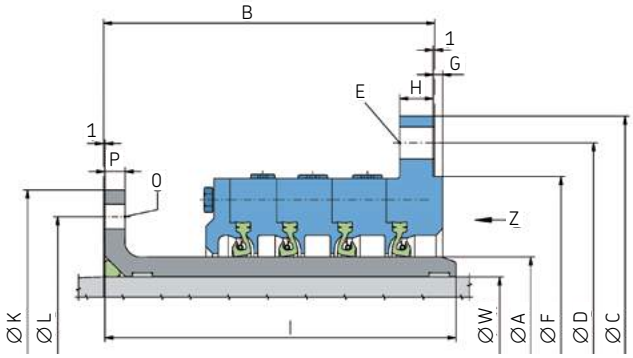

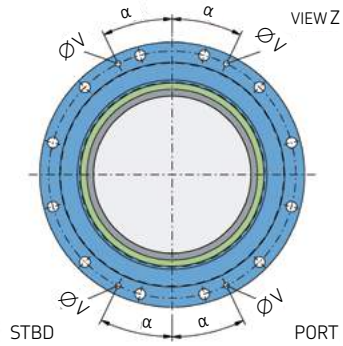

Simplex sterntube seals, oil-lubricated

A Size	W min	W max	B 1)	C	D	E	F	G	H	I	K	L	O	P	α	V	Weight 2)
mm							mm							mm			kg
125	80	110	202	275	245	8 x M12	210	6	15	220	186	164	8 x M8	12	34	8	35
140	111	125	202	290	260	8 x M12	225	6	15	220	202	180	8 x M8	12	34	8	34
160	126	145	202	310	280	8 x M12	245	6	15	220	222	200	8 x M8	12	34	8	40
180	146	165	205	330	300	8 x M12	265	6	15	223	260	230	8 x M12	12	34	8	45
200	166	185	205	350	320	8 x M12	285	6	15	223	280	250	8 x M12	12	34	8	49
220	186	205	205	370	340	8 x M12	305	6	15	223	300	270	8 x M12	12	34	8	54
240	206	225	228	425	390	12 x M16	345	6	20	242	320	290	8 x M12	15	26	8	76
260	226	245	228	445	410	12 x M16	365	6	20	242	340	310	8 x M12	15	26	8	82
280	246	265	228	465	430	12 x M16	385	6	20	242	360	330	12 x M12	15	26	8	88
300	266	285	228	485	450	12 x M16	405	6	20	242	375	346	12 x M12	15	26	8	93
330	286	315	228	515	480	12 x M16	435	6	20	242	425	390	12 x M12	15	26	8	111
355	316	339	247	565	525	12 x M20	475	7	25	262	450	416	12 x M16	15	26	8	141
380	340	362	247	590	550	12 x M20	500	7	25	262	480	440	12 x M16	15	26	8	152
400	363	381	252	610	570	12 x M20	520	7	25	267	500	460	12 x M16	20	26	8	159
420	382	400	252	630	590	12 x M20	540	7	25	267	520	486	12 x M16	20	26	8	167
450	401	428	277	675	630	12 x M20	575	8	30	291	550	510	12 x M16	20	21	12	218
480	429	457	277	705	660	12 x M20	605	8	30	291	590	550	12 x M20	20	21	12	236
500	458	476	277	725	680	12 x M20	625	8	30	291	600	560	12 x M20	20	21	12	229
530	477	504	277	755	710	12 x M20	655	8	30	291	630	590	12 x M20	20	21	12	261
560	505	532	293	820	765	12 x M24	700	9	35	304	675	630	12 x M20	20	21	12	326
600	533	570	293	860	805	12 x M24	740	9	35	304	700	660	12 x M20	20	21	12	368
630	571	598	298	890	835	12 x M24	770	9	35	309	760	710	12 x M24	25	21	12	382
670	599	635	298	930	875	1 2x M24	810	9	35	309	820	750	12 x M24	25	21	12	438
710	636	672	332	990	930	16 x M24	865	10	40	351	840	790	12 x M24	25	18	12	551
750	673	710	332	1 030	970	16 x M24	905	10	40	351	885	836	16 x M24	25	18	12	591
800	711	756	367	1 090	1 030	20 x M24	960	10	40	393	945	890	16 x M24	30	14	12	745
850	757	803	367	1 140	1 080	20 x M24	1 010	10	40	393	1 000	950	16 x M24	30	14	12	806
900	804	851	389	1 200	1 135	20 x M24	1 065	11	45	419	1 070	1 010	16 x M24	35	14	12	946
950	852	896	389	1 250	1 185	20 x M24	1 115	11	45	419	1 130	1 070	16 x M24	35	14	12	1 010
975	897	927	389	1 300	1 235	20 x M24	1 165	11	45	419	1 170	1 110	20 x M24	35	18	12	973
1 000	928	952	389	1 300	1 235	20 x M24	1 165	11	45	419	1 170	1 110	20 x M24	35	18	12	934
1 030	953	982	414	1 400	1 325	24 x M30	1 245	11	50	439	1 230	1 170	20 x M24	35	18	15	1 162
1 060	983	1 007	414	1 400	1 325	24 x M30	1 245	11	50	439	1 230	1 170	20 x M24	35	18	15	1 148
1 090	1 008	1 032	414	1 460	1 385	24 x M30	1 305	11	50	439	1 300	1230	20 x M30	40	18	15	1 274
1 120	1 033	1 056	414	1 460	1 385	24 x M30	1 305	11	50	439	1 300	1 230	20 x M30	40	18	15	1 285
1 180	1 057	1 116	414	1 520	1 445	24 x M30	1 365	11	50	439	1 360	1 290	24 x M30	40	15	15	1 560
1 250	1 117	1 186	434	1 595	1 520	24 x M30	1 440	12	50	468	1 430	1 360	24 x M30	40	15	15	1 805

1) Incl. 2x1 mm packing

2) Weights may vary according to seal execution

Simplex Multisafe split design (ME), SC3 – aft seal

General description

- 4-ring sterntube seal system for additional protection of seawater against oil pollution
- 2 sealing rings facing sterntube oil
- Liner and housing are axially split

Function

- A stationary housing fixes the Simplex sealing rings (2 facing seawater/2 facing sterntube oil). The rotating liner is fixed to the propeller.
- Oil chamber I is initially filled with lube oil ensuring optimal lubrication and protection from dirt.
- Oil chambers II + III are filled with lube oil and is pressure-controlled through the respective aft seal tank (B). This independent oil supply ensures optimal lubrication.
- Oil chambers II + III are connected to the aft seal tank (B) for equal pressure setting. Thus spare sealing ring #3R runs without load under normal operating conditions. If sealing ring #3 becomes damaged, spare ring #3R can be activated by closing the shut off valve in the oil supply and vent line.
- Condition monitoring of aft seal via oil level indication of the aft seal tank (B).
- Additional pipes to seal chambers II + III for venting and lube oil circulation.

Configuration

Split variations		Housing material		Liner coating		Upgrades		Distance ring	Bio-oil compatible
Split liner / Non-split housing	Split housing / Non-split liner	Cast iron	Bronze	Ceramic	Tungsten carbide	Active circulation	Net protection	Split design	e.g. for VGP 2013
○	○	●	○	—	—	○	○	○	○

● Available/required ○ Available on request — Not available

Functional principle

A = Header tank with level alarm
B = Tank for aft seal with level alarm
C = Tank for fwd seal with level alarm
LS = Level switch
LWL = Load water line
BWL = Ballast water line
CL = Center line

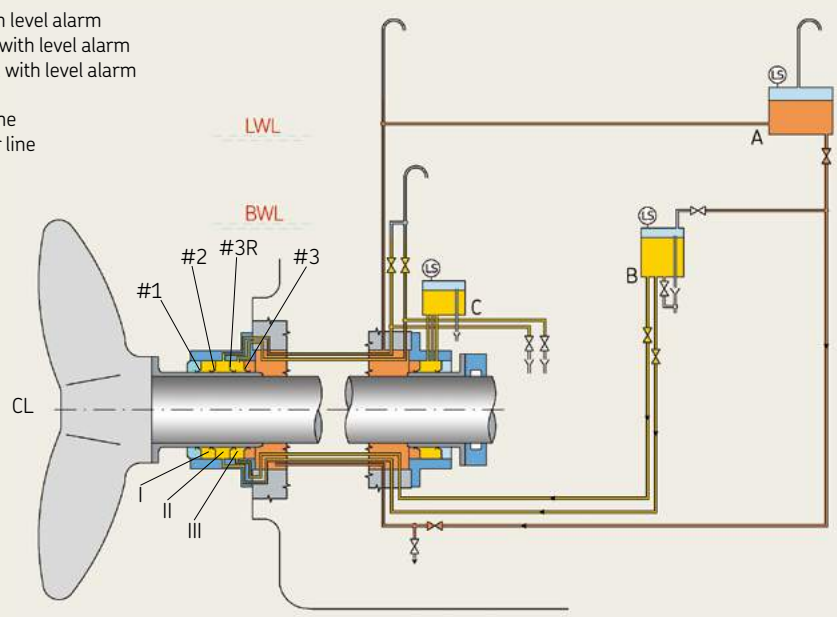

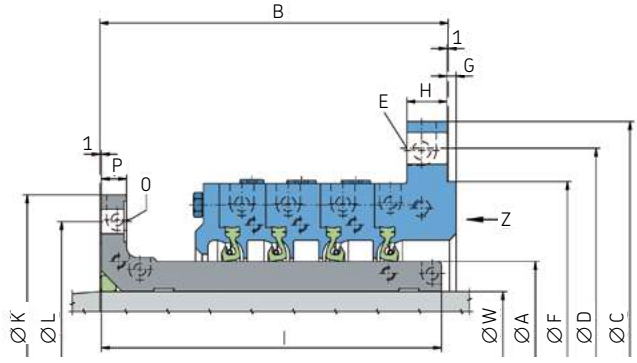

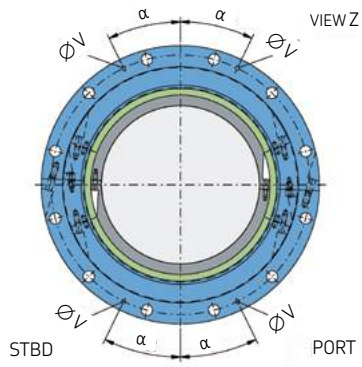

A Size	W min	W max	B 1)	C	D	E	F	G	H	I	K	L	O	P	α	V	Weight 2)
mm							mm							mm			kg
140	90	104	217	290	260	8 x M12	225	6	23	213	202	180	8 x M8	14	34	8	44
160	105	124	217	310	280	8 x M12	245	6	23	213	222	200	8 x M8	14	34	8	51
180	125	144	220	330	300	8 x M12	265	6	23	216	260	230	8 x M12	18	34	8	59
200	145	164	220	350	320	8 x M12	285	6	23	216	280	250	8 x M12	18	34	8	64
220	165	184	220	370	340	8 x M12	305	6	23	216	300	270	8 x M12	18	34	8	71
240	185	204	243	425	390	12 x M16	345	6	24	238	320	290	8 x M12	19	26	8	96
260	205	224	243	445	410	12 x M16	365	6	24	238	340	310	8 x M12	19	26	8	103
280	225	244	243	465	430	12 x M16	385	6	24	238	360	330	12 x M12	19	26	8	110
300	245	264	243	485	450	12 x M16	405	6	24	238	375	346	12 x M12	19	26	8	117
330	265	294	243	515	480	12 x M16	435	6	24	238	425	390	12 x M12	19	26	8	138
355	295	319	262	565	525	12 x M20	475	7	30	256	450	416	12 x M16	19	26	8	174
380	320	344	262	590	550	12 x M20	500	7	30	256	480	440	12 x M16	19	26	8	186
400	345	364	267	610	570	12 x M20	520	7	30	261	500	460	12 x M16	19	26	8	190
420	365	384	267	630	590	12 x M20	540	7	30	261	520	486	12 x M16	19	26	8	199
450	385	415	292	675	630	12 x M20	575	8	30	285	550	510	12 x M16	22	21	12	252
480	416	445	292	705	660	12 x M20	605	8	30	285	590	550	12 x M20	22	21	12	267
500	446	464	292	725	680	12 x M20	625	8	30	285	600	560	12 x M20	22	21	12	261
530	465	494	292	755	710	12 x M20	655	8	30	285	630	590	12 x M20	22	21	12	293
560	495	523	308	820	765	12 x M24	700	9	35	301	675	630	12 x M20	25	21	12	363
600	524	558	308	860	805	12 x M24	740	9	35	301	700	660	12 x M20	25	21	12	405
630	559	588	313	890	835	12 x M24	770	9	35	306	760	710	12 x M24	25	21	12	424
670	589	628	313	930	875	12 x M24	810	9	35	306	820	750	12 x M24	25	21	12	477
710	629	662	340	990	930	16 x M24	865	10	40	333	840	790	12 x M24	27	18	12	581
750	663	702	340	1 030	970	16 x M24	905	10	40	333	885	836	16 x M24	27	18	12	630
800	703	752	376	1 090	1 030	20 x M24	960	10	40	367	945	890	16 x M24	34	14	12	784
850	753	801	376	1 140	1 080	20 x M24	1 010	10	40	367	1 000	950	16 x M24	34	14	12	834
900	802	851	398	1 200	1 135	20 x M24	1 065	11	45	386	1 070	1 010	16 x M24	36	14	12	960
950	852	901	398	1 250	1 185	20 x M24	1 115	11	45	386	1 130	1 070	16 x M24	36	14	12	1 016
1 000	902	950	398	1 300	1 235	20 x M24	1 165	11	45	386	1 170	1 110	20 x M24	36	18	12	1 062

1) Incl. 2x1 mm packing

2) Weights may vary according to seal execution

Simplex Multisafe (BR), SC3 – aft seal

General description

- 4-ring sterntube seal system for additional protection of the sterntube against water ingress
- 3 sealing rings facing seawater
- Available for FPSO vessels as Multisafe BRD version with
  - Grease in chamber I
  - Grease dosing unit for chamber I

Function

- A stationary housing fixes the Simplex sealing rings (3 facing seawater/1 facing sterntube oil). The rotating liner is fixed to the propeller.
- Oil chamber I is initially filled with lube oil ensuring optimal lubrication and protection from dirt.
- Oil chambers II + III are filled with lube oil and is pressure-controlled through the respective aft seal tank (B). This independent oil supply ensures optimal lubrication.
- Oil chambers II + III are connected to the aft seal tank (B) for equal pressure setting. Thus spare sealing ring #2R runs without load under normal operating conditions. If sealing ring #2 becomes damaged, spare ring #2R can be activated by closing the shut off valve in the oil supply and vent line.
- Condition monitoring of aft seal via oil level indication of the aft seal tank (B).
- Two additional pipes for venting and lube oil circulation.

Configuration

Housing material		Liner coating		Upgrades			Distance ring	Bio-oil compatible
Cast iron	Bronze	Ceramic	Tungsten carbide	Grease in chamber I (only BRD)	Active circulation	Net protection	Split design	e.g. for VGP 2013
●	○	○	○	○	○	○	○	○

● Available/required ○ Available on request

Functional principle

A = Header tank with level alarm
B = Tank for aft seal with level alarm
C = Tank for fwd seal with level alarm
LS = Level switch
LWL = Load water line
BWL = Ballast water line
CL = Center line

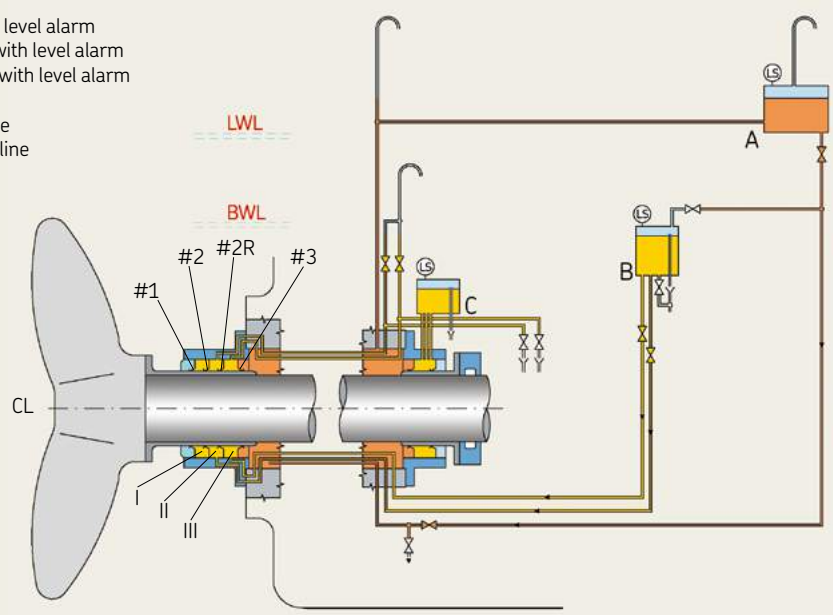

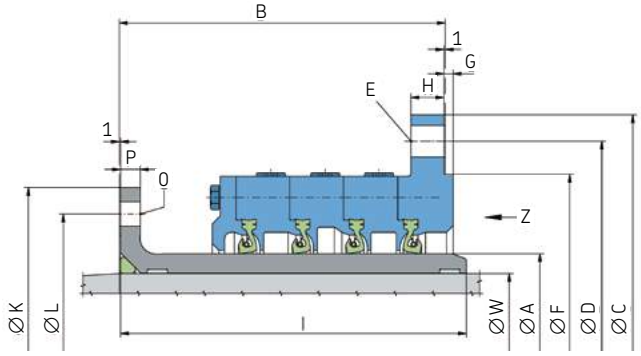

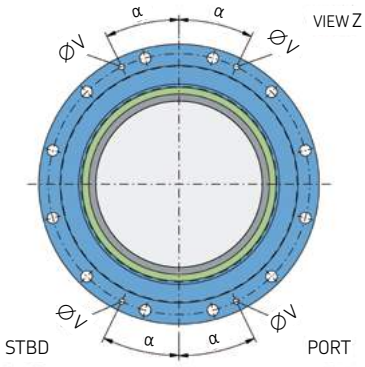

Simplex sterntube seals, oil-lubricated

A Size	W min	W max	B 1)	C	D	E	F	G	H	I	K	L	O	P	α	V	Weight 2)
mm							mm							mm			kg
125	80	110	202	275	245	8 x M12	210	6	15	220	186	164	8 x M8	12	34	8	35
140	111	125	202	290	260	8 x M12	225	6	15	220	202	180	8 x M8	12	34	8	34
160	126	145	202	310	280	8 x M12	245	6	15	220	222	200	8 x M8	12	34	8	40
180	146	165	205	330	300	8 x M12	265	6	15	223	260	230	8 x M12	12	34	8	45
200	166	185	205	350	320	8 x M12	285	6	15	223	280	250	8 x M12	12	34	8	49
220	186	205	205	370	340	8 x M12	305	6	15	223	300	270	8 x M12	12	34	8	54
240	206	225	228	425	390	12 x M16	345	6	20	242	320	290	8 x M12	15	26	8	76
260	226	245	228	445	410	12 x M16	365	6	20	242	340	310	8 x M12	15	26	8	82
280	246	265	228	465	430	12 x M16	385	6	20	242	360	330	12 x M12	15	26	8	88
300	266	285	228	485	450	12 x M16	405	6	20	242	375	346	12 x M12	15	26	8	93
330	286	315	228	515	480	12 x M16	435	6	20	242	425	390	12 x M12	15	26	8	111
355	316	339	247	565	525	12 x M20	475	7	25	262	450	416	12 x M16	15	26	8	141
380	340	362	247	590	550	12 x M20	500	7	25	262	480	440	12 x M16	15	26	8	152
400	363	381	252	610	570	12 x M20	520	7	25	267	500	460	12 x M16	20	26	8	159
420	382	400	252	630	590	12 x M20	540	7	25	267	520	486	12 x M16	20	26	8	167
450	401	428	277	675	630	12 x M20	575	8	30	291	550	510	12 x M16	20	21	12	218
480	429	457	277	705	660	12 x M20	605	8	30	291	590	550	12 x M20	20	21	12	236
500	458	476	277	725	680	12 x M20	625	8	30	291	600	560	12 x M20	20	21	12	229
530	477	504	277	755	710	12 x M20	655	8	30	291	630	590	12 x M20	20	21	12	261
560	505	532	293	820	765	12 x M24	700	9	35	304	675	630	12 x M20	20	21	12	326
600	533	570	293	860	805	12 x M24	740	9	35	304	700	660	12 x M20	20	21	12	368
630	571	598	298	890	835	12 x M24	770	9	35	309	760	710	12 x M24	25	21	12	382
670	599	635	298	930	875	12 x M24	810	9	35	309	820	750	12 x M24	25	21	12	438
710	636	672	332	990	930	16 x M24	865	10	40	351	840	790	12 x M24	25	18	12	551
750	673	710	332	1 030	970	16 x M24	905	10	40	351	885	836	16 x M24	25	18	12	591
800	711	756	367	1 090	1 030	20 x M24	960	10	40	393	945	890	16 x M24	30	14	12	745
850	757	803	367	1 140	1 080	20 x M24	1 010	10	40	393	1 000	950	16 x M24	30	14	12	806
900	804	851	389	1 200	1 135	20 x M24	1 065	11	45	419	1 070	1 010	16 x M24	35	14	12	946
950	852	896	389	1 250	1 185	20 x M24	1 115	11	45	419	1 130	1 070	16 x M24	35	14	12	1 010
975	897	927	389	1 300	1 235	20 x M24	1 165	11	45	419	1 170	1 110	20 x M24	35	18	12	973
1 000	928	952	389	1 300	1 235	20 x M24	1 165	11	45	419	1 170	1 110	20 x M24	35	18	12	934
1 030	953	982	414	1 400	1 325	24 x M30	1 245	11	50	439	1 230	1 170	20 x M24	35	18	15	1 162
1 060	983	1 007	414	1 400	1 325	24 x M30	1 245	11	50	439	1 230	1 170	20 x M24	35	18	15	1 148
1 090	1 008	1 032	414	1 460	1 385	24 x M30	1 305	11	50	439	1 300	1 230	20 x M30	40	18	15	1 274
1 120	1 033	1 056	414	1 460	1 385	24 x M30	1 305	11	50	439	1 300	1 230	20 x M30	40	18	15	1 285
1 180	1 057	1 116	414	1 520	1 445	24 x M30	1 365	11	50	439	1 360	1 290	24 x M30	40	15	15	1 560
1 250	1 117	1 186	434	1 595	1 520	24 x M30	1 440	12	50	468	1 430	1 360	24 x M30	40	15	15	1 805

1) Incl. 2x1 mm packing 2) Weights may vary according to seal execution

Simplex Multisafe split design (BRE), SC3 – aft seal

General description

- 4-ring sterntube seal system for additional protection of the sterntube against water ingress
- 3 sealing rings facing seawater
  Liner and housing are axially split
- Available for FPSO vessels as Multisafe BRDE version with
  - Grease in chamber I
  - Grease dosing unit for chamber I

Function

- A stationary housing fixes the Simplex sealing rings (3 facing seawater/1 facing sterntube oil). The rotating liner is fixed to the propeller.
- Oil chamber I is initially filled with lube oil ensuring optimal lubrication and protection from dirt.
- Oil chambers II + III are filled with lube oil and is pressure-controlled through the respective aft seal tank (B). This independent oil supply ensures optimal lubrication.
- Oil chambers II + III are connected to the aft seal tank (B) for equal pressure setting. Thus spare sealing ring #2R runs without load under normal operating conditions. If sealing ring #2 becomes damaged, spare ring #2R can be activated by closing the shut off valve in the oil supply and vent line.
- Condition monitoring of aft seal via oil level indication of the aft seal tank (B).
- Two additional pipes for venting and lube oil circulation.

Configuration

Split variations		Housing material		Liner coating		Upgrades			Distance ring	Bio-oil compatible
Split liner / Non-split housing	Split housing / Non-split liner	Cast iron	Bronze	Ceramic	Tungsten carbide	Grease in chambers I + II	Active circulation	Net protection	Split design	e.g. for VGP 2013
○	○	●	○	—	—	○	○	○	○	○

● Available/required ○ Available on request — Not available

Functional principle

A = Header tank with level alarm
B = Tank for aft seal with level alarm
C = Tank for fwd seal with level alarm
LS = Level switch
LWL = Load water line
BWL = Ballast water line
CL = Center line

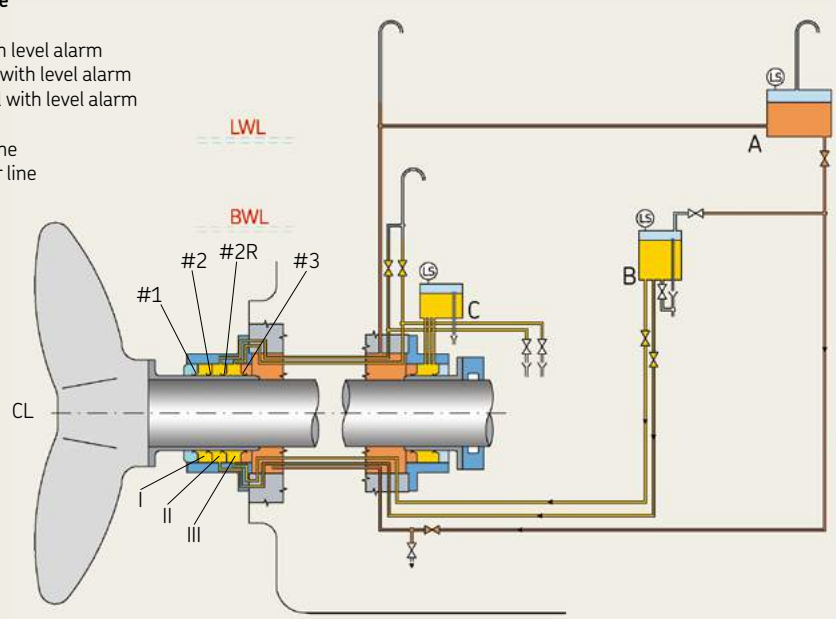

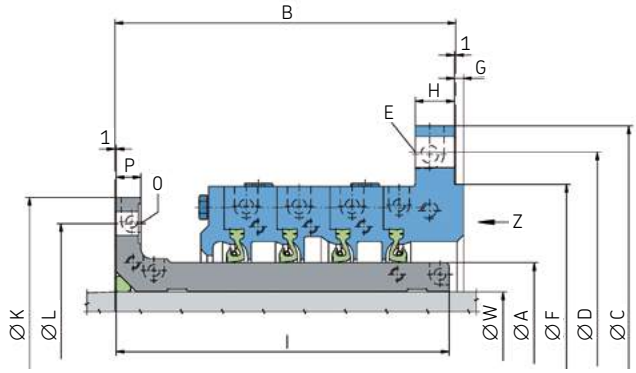

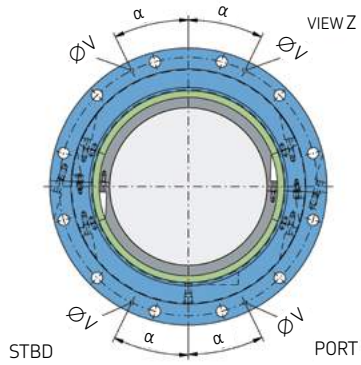

A Size	W min	W max	B [1]	C	D	E	F	G	H	I	K	L	O	P	α	V	Weight [2]
mm							mm							mm			kg
140	90	104	217	290	260	8 x M12	225	6	23	213	202	180	8 x M8	14	34	8	44
160	105	124	217	310	280	8 x M12	245	6	23	213	222	200	8 x M8	14	34	8	51
180	125	144	220	330	300	8 x M12	265	6	23	216	260	230	8 x M12	18	34	8	59
200	145	164	220	350	320	8 x M12	285	6	23	216	280	250	8 x M12	18	34	8	64
220	165	184	220	370	340	8 x M12	305	6	23	216	300	270	8 x M12	18	34	8	71
240	185	204	243	425	390	12 x M16	345	6	24	238	320	290	8 x M12	19	26	8	96
260	205	224	243	445	410	12 x M16	365	6	24	238	340	310	8 x M12	19	26	8	103
280	225	244	243	465	430	12 x M16	385	6	24	238	360	330	12 x M12	19	26	8	110
300	245	264	243	485	450	12 x M16	405	6	24	238	375	346	12 x M12	19	26	8	117
330	265	294	243	515	480	12 x M16	435	6	24	238	425	390	12 x M12	19	26	8	138
355	295	319	262	565	525	12 x M20	475	7	30	256	450	416	12 x M16	19	26	8	174
380	320	344	262	590	550	12 x M20	500	7	30	256	480	440	12 x M16	19	26	8	186
400	345	364	267	610	570	12 x M20	520	7	30	261	500	460	12 x M16	19	26	8	190
420	365	384	267	630	590	12 x M20	540	7	30	261	520	486	12 x M16	19	26	8	199
450	385	415	292	675	630	12 x M20	575	8	30	285	550	510	12 x M16	22	21	12	252
480	416	445	292	705	660	12 x M20	605	8	30	285	590	550	12 x M20	22	21	12	267
500	446	464	292	725	680	12 x M20	625	8	30	285	600	560	12 x M20	22	21	12	261
530	465	494	292	755	710	12 x M20	655	8	30	285	630	590	12 x M20	22	21	12	293
560	495	523	308	820	765	12 x M24	700	9	35	301	675	630	12 x M20	25	21	12	363
600	524	558	308	860	805	12 x M24	740	9	35	301	700	660	12 x M20	25	21	12	405
630	559	588	313	890	835	12 x M24	770	9	35	306	760	710	12 x M24	25	21	12	424
670	589	628	313	930	875	12 x M24	810	9	35	306	820	750	12 x M24	25	21	12	477
710	629	662	340	990	930	16 x M24	865	10	40	333	840	790	12 x M24	27	18	12	581
750	663	702	340	1 030	970	16 x M24	905	10	40	333	885	836	16 x M24	27	18	12	630
800	703	752	376	1 090	1 030	20 x M24	960	10	40	367	945	890	16 x M24	34	14	12	784
850	753	801	376	1 140	1 080	20 x M24	1 010	10	40	367	1 000	950	16 x M24	34	14	12	834
900	802	851	398	1 200	1 135	20 x M24	1 065	11	45	386	1 070	1 010	16 x M24	36	14	12	960
950	852	901	398	1 250	1 185	20 x M24	1 115	11	45	386	1 130	1 070	16 x M24	36	14	12	1 016
1 000	902	950	398	1 300	1 235	20 x M24	1 165	11	45	386	1 170	1 110	20 x M24	36	18	12	1 062

[1] Incl. 2x1 mm packing [2] Weights may vary according to seal execution

Simplex Airspace (SI, SII), SC3 – aft seal

General description

- 4-ring aft sterntube seal system with a dedicated air chamber ensuring the perfect separation of seawater and sterntube lube oil
- Excellent long-term performance, high operational reliability and completely pollution free
- The Airspace seal allows to operate the sterntube with mineral oil in compliance with the VGP2013 regulations. It is considered a non oil-to-sea interface

Function

- A stationary bronze housing fixes the Simplex sealing rings (3 facing seawater/ 1 facing sterntube oil). The rotating liner is fixed to the propeller.
- Water chamber I is constantly flushed with seawater ensuring optimal cooling of the sealing rings by the internal circulator without the use of external equipment.
- Air chamber II separates seawater and oil. The air control unit (P) regulates the pressure inside the air chamber depending on the vessel's draft. The air pressure is set below seawater pressure, thus no air or oil can escape to the sea.
- All collected fluids are automatically drained to inside the vessel at regular intervals.
- Oil chamber III is filled with lube oil. It is pressure-controlled through the respective aft seal tank (B). This independent oil supply ensures optimal lubrication and monitoring of the aft seal.

Configuration

Housing material		Liner coating		Upgrades		Distance ring	VGP 2013 compliant
Cast iron	Bronze	Ceramic	Tungsten carbide	Active circulation (Mandatory for size >950)	Net protection	Split design	Operation with mineral oil
—	●	—	—	○	○	○	●

● Available/required ○ Available on request — Not available

Functional principle

A = Header tank with level alarm
B = Tank for aft seal with level alarm
C = Tank for fwd seal with level alarm
P = Air control unit (Airspace)
LS = Level switch
Y2 = Solenoid drain valve
LWL = Load water line
BWL = Ballast water line
CL = Center line

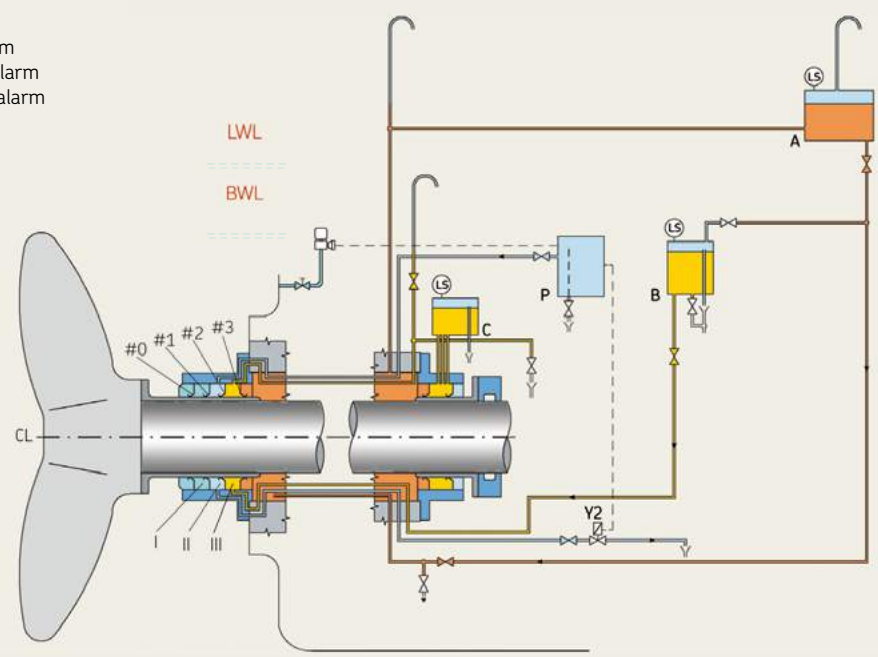

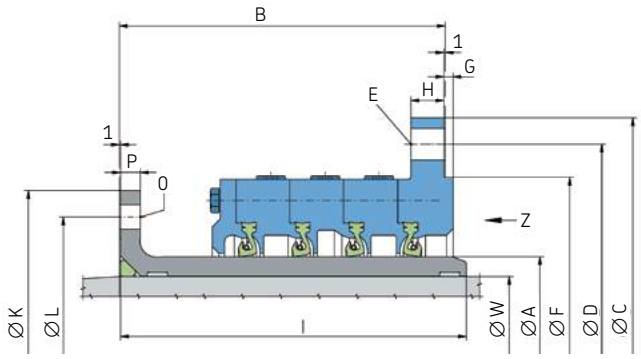

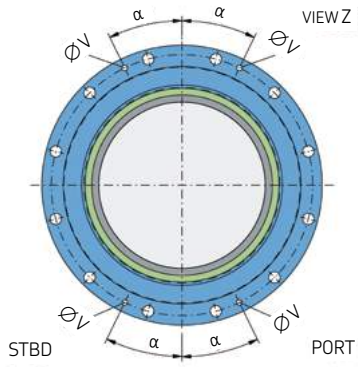

A Size	W min	W max	B [1]	C	D	E	F	G	H	I	K	L	O	P	α	V	Weight [2]
mm							mm							mm			kg
240	206	225	228	425	390	12 x M16	345	6	20	242	320	290	8 x M12	15	26	8	86
260	226	245	228	445	410	12 x M16	365	6	20	242	340	310	8 x M12	15	26	8	92
280	246	265	228	465	430	12 x M16	385	6	20	242	360	330	12 x M12	15	26	8	98
300	266	285	228	485	450	12 x M16	405	6	20	242	375	346	12 x M12	15	26	8	104
330	286	315	228	515	480	12 x M16	435	6	20	242	425	390	12 x M12	15	26	8	123
355	316	339	247	565	525	12 x M20	475	7	25	262	450	416	12 x M16	15	26	8	159
380	340	362	247	590	550	12 x M20	500	7	25	262	480	440	12 x M16	15	26	8	170
400	363	381	252	610	570	12 x M20	520	7	25	267	500	460	12 x M16	20	26	8	178
420	382	400	252	630	590	12 x M20	540	7	25	267	520	486	12 x M16	20	26	8	188
450	401	428	277	675	630	12 x M20	575	8	30	291	550	510	12 x M16	20	21	12	243
480	429	457	277	705	660	12 x M20	605	8	30	291	590	550	12 x M20	20	21	12	263
500	458	476	277	725	680	12 x M20	625	8	30	291	600	560	12 x M20	20	21	12	256
530	477	504	277	755	710	12 x M20	655	8	30	291	630	590	12 x M20	20	21	12	289
560	505	532	293	820	765	12 x M24	700	9	35	304	675	630	12 x M20	20	21	12	363
600	533	570	293	860	805	12 x M24	740	9	35	304	700	660	12 x M20	20	21	12	408
630	571	598	298	890	835	12 x M24	770	9	35	309	760	710	12 x M24	25	21	12	424
670	599	635	298	930	875	12 x M24	810	9	35	309	820	750	12 x M24	25	21	12	481
710	636	672	332	990	930	16 x M24	865	10	40	351	840	790	12 x M24	25	18	12	609
750	673	710	332	1 030	970	16 x M24	905	10	40	351	885	836	16 x M24	25	18	12	652
800	711	756	367	1 090	1 030	20 x M24	960	10	40	393	945	890	16 x M24	30	14	12	817
850	757	803	367	1 140	1 080	20 x M24	1 010	10	40	393	1 000	950	16 x M24	30	14	12	883
900	804	851	389	1 200	1 135	20 x M24	1 065	11	45	419	1 070	1 010	16 x M24	35	14	12	1 031
950	852	896	389	1 250	1 185	20 x M24	1 115	11	45	419	1 130	1 070	16 x M24	35	14	12	1 099
975	897	927	389	1 300	1 235	20 x M24	1 165	11	45	419	1 170	1 110	20 x M24	35	18	12	1 068
1 000	928	952	389	1 300	1 235	20 x M24	1 165	11	45	419	1 170	1 110	20 x M24	35	18	12	1 027
1 030	953	982	414	1 400	1 325	24 x M30	1 245	11	50	439	1 230	1 170	20 x M24	35	18	15	1 283
1 060	983	1 007	414	1 400	1 325	24 x M30	1 245	11	50	439	1 230	1 170	20 x M24	35	18	15	1 267
1 090	1 008	1 032	414	1 460	1 385	24 x M30	1 305	11	50	439	1 300	1 230	20 x M30	40	18	15	1 402
1 120	1 033	1 056	414	1 460	1 385	24 x M30	1 305	11	50	439	1 300	1 230	20 x M30	40	18	15	1 410
1 180	1 057	1 116	414	1 520	1 445	24 x M30	1 365	11	50	439	1 360	1 290	24 x M30	40	15	15	1 691
1 250	1 117	1 186	434	1 595	1 520	24 x M30	1 440	12	50	468	1 430	1 360	24 x M30	40	15	15	1 951

[1] Incl. 2x1 mm packing [2] Weights may vary according to seal execution

Simplex Airspace split design (SIE, SIIE), SC3 – aft seal

General description

- 4-ring aft sterntube seal system with a dedicated air chamber ensuring the perfect separation of seawater and sterntube lube oil
- Excellent long-term performance, high operational reliability and completely pollution free
- The Airspace seal allows to operate the sterntube with mineral oil in compliance with the VGP2013 regulations. It is considered a non oil-to-sea interface
- Liner and housing are axially split

Function

- A stationary bronze housing fixes the Simplex sealing rings (3 facing seawater/ 1 facing sterntube oil). The rotating liner is fixed to the propeller.
- Water chamber I is constantly flushed with seawater ensuring optimal cooling of the sealing rings by the internal circulator.
- Air chamber II separates seawater and oil. The air control unit (P) regulates the pressure inside the air chamber depending on the vessel's draft. The air pressure is set below seawater pressure, thus no air or oil can escape to the sea.
- All collected fluids are automatically drained to inside the vessel at regular intervals.
- Oil chamber III is filled with lube oil. It is pressure-controlled through the respective aft seal tank (B). This independent oil supply ensures optimal lubrication and monitoring of the aft seal.

Configuration

Split variations		Housing material		Liner coating		Upgrades		Distance ring	Bio-oil compatible
Split liner / Non-split housing	Split housing / Non-split liner	Cast iron	Bronze	Ceramic	Tungsten carbide	Active circulation (Mandatory for size >950)	Net protection	Split design	e.g. for VGP 2013
○	○	—	●	—	—	○	○	○	●

● Available/required ○ Available on request — Not available

Functional principle

A = Header tank with level alarm
B = Tank for aft seal with level alarm
C = Tank for fwd seal with level alarm
P = Air control unit (Airspace)
LS = Level switch
Y2 = Solenoid drain valve
LWL = Load water line
BWL = Ballast water line
CL = Center line

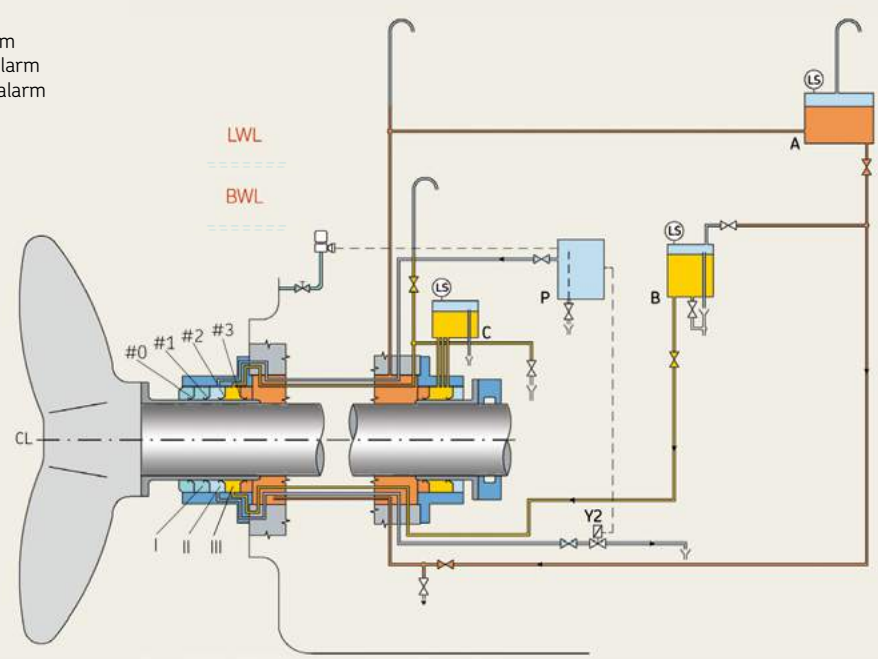

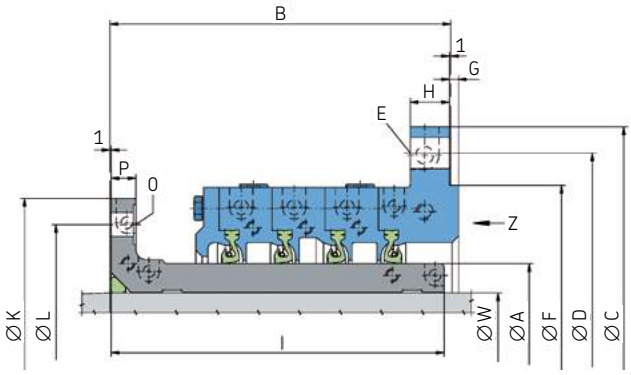

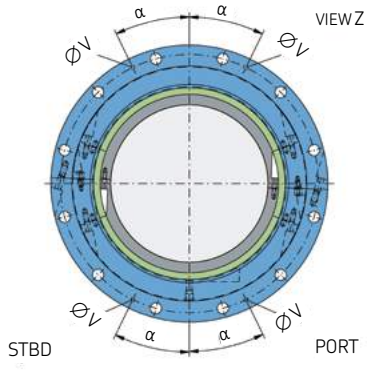

A Size	W min	W max	B 1)	C	D	E	F	G	H	I	K	L	O	P	α	V	Weight 2)
mm							mm							mm			kg
240	185	204	243	425	390	12 x M16	345	6	24	238	320	290	8 x M12	19	26	8	106
260	205	224	243	445	410	12 x M16	365	6	24	238	340	310	8 x M12	19	26	8	114
280	225	244	243	465	430	12 x M16	385	6	24	238	360	330	12 x M12	19	26	8	122
300	245	264	243	485	450	12 x M16	405	6	24	238	375	346	12 x M12	19	26	8	129
330	265	294	243	515	480	12 x M16	435	6	24	238	425	390	12 x M12	19	26	8	151
355	295	319	262	565	525	12 x M20	475	7	30	256	450	416	12 x M16	19	26	8	193
380	320	344	262	590	550	12 x M20	500	7	30	256	480	440	12 x M16	19	26	8	206
400	345	364	267	610	570	12 x M20	520	7	30	261	500	460	12 x M16	19	26	8	212
420	365	384	267	630	590	12 x M20	540	7	30	261	520	486	12 x M16	19	26	8	221
450	385	415	292	675	630	12 x M20	575	8	30	285	550	510	12 x M16	22	21	12	278
480	416	445	292	705	660	12 x M20	605	8	30	285	590	550	12 x M20	22	21	12	296
500	446	464	292	725	680	12 x M20	625	8	30	285	600	560	12 x M20	22	21	12	290
530	465	494	292	755	710	12 x M20	655	8	30	285	630	590	12 x M20	22	21	12	324
560	495	523	308	820	765	12 x M24	700	9	35	301	675	630	12 x M20	25	21	12	403
600	524	558	308	860	805	12 x M24	740	9	35	301	700	660	12 x M20	25	21	12	447
630	559	588	313	890	835	12 x M24	770	9	35	306	760	710	12 x M24	25	21	12	468
670	589	628	313	930	875	12 x M24	810	9	35	306	820	750	12 x M24	25	21	12	524
710	629	662	340	990	930	16 x M24	865	10	40	333	840	790	12 x M24	27	18	12	642
750	663	702	340	1 030	970	16 x M24	905	10	40	333	885	836	16 x M24	27	18	12	694
800	703	752	376	1 090	1 030	20 x M24	960	10	40	367	945	890	16 x M24	34	14	12	861
850	753	801	376	1 140	1 080	20 x M24	1 010	10	40	367	1 000	950	16 x M24	34	14	12	915
900	802	851	398	1 200	1 135	20 x M24	1 065	11	45	386	1 070	1 010	16 x M24	36	14	12	1 051
950	852	901	398	1 250	1 185	20 x M24	1 115	11	45	386	1 130	1 070	16 x M24	36	14	12	1 112
1 000	902	950	398	1 300	1 235	20 x M24	1 165	11	45	386	1 170	1 110	20 x M24	36	18	12	1 162

1) Incl. 2x1 mm packing

2) Weights may vary according to seal execution

Simplex Active circulation unit

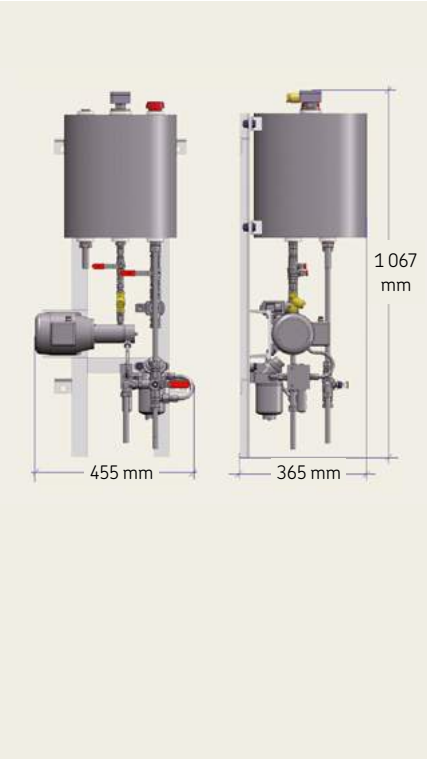

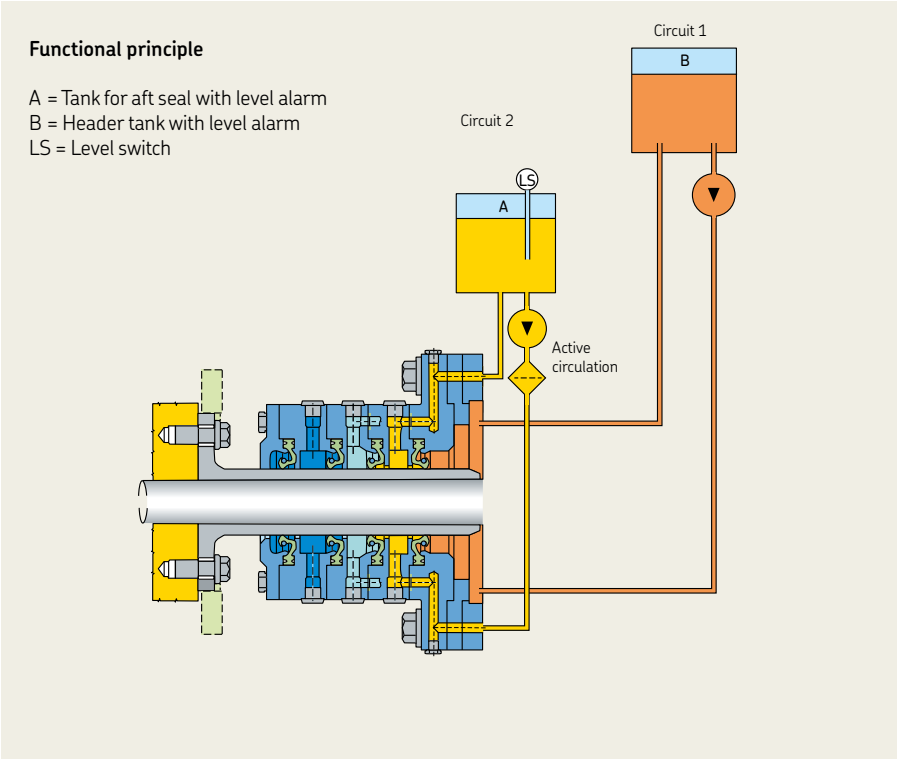

General description

- Continuous circulation of oil and venting of the aft seal oil chamber
- Optimized lubrication of the sealing rings with replenished oil
- Simple and safe filling of oil pipes and the aft seal oil chamber
- Air-free oil in the aft seal oil chamber
- Standard for Airspace seals with seal size 950 and higher
- Available for new-builds and retrofits

Technical specifications

- Pump motor*
  Power supply 115, 230, 400, 440 VAC, 60Hz available, 50Hz on request, IP 55
- Piston pump oil flow capacity
  15 - 50 litres/day, standard: 30 litres/day
- Impulse sensor (oil flow sensor), 24 V impulse type
- Solenoid valve, 24 V

*Component can differ depending on the Active circulation version

Applications

- Perfect oil supply to the aft seal in case of long and/or insufficiently vented pipes
- Suitable for all vessel with Simplex seals and having two pipes connected to the oil chamber

Simplex Oil dryer

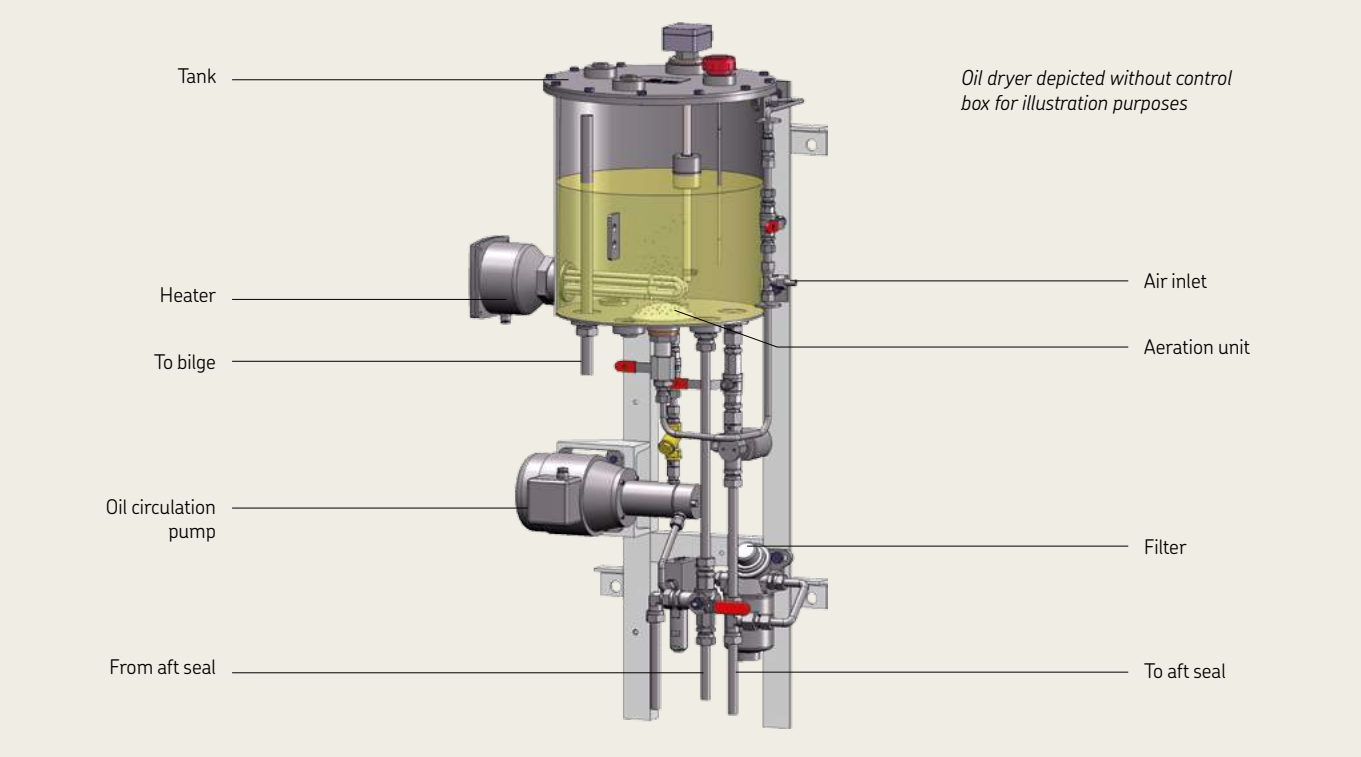

Oil dryer depicted without control box for illustration purposes

General description

- Dewatering unit for aft seal lubrication oil
- Delivered as a complete system with oil circulating pump and filter
- Available for new-builds and retrofits
- Automated maintenance
- Delivery as complete system (skid mounted) or supplied loose

Technical specifications

- Pump motor
  440 V AC / 60 Hz, 0.14 kW, 1 800 r/min, IP 55
- Piston pump oil flow rate
  15 - 50 litres/day, standard: 50 litres/day
- Impulse sensor (oil flow sensor), 24 V impulse type
- Solenoid valve , 24 V
- Air supply 6 – 9 bar ISO 8571, class [5:4:3] or better
- Dewatering rate up to 1.5 litres/day
- Heating power 250 W
  with 2 point controller 440 V / 60 Hz, max oil temperature 50 °C
- Maximum power consumption 450 W, average power consumption 300 W
- Weight 70 kg

Applications

- Especially recommended for operation with ester-based oils such as environmental acceptable lubricants (EAL)
- Quick and easy installation during regular port calls

Simplex Basic (Z), SC3 – fwd seal

General description

- 2-ring fwd sterntube seal for standard applications
- Combinable with each aft seal

Function

- A stationary housing fixes the Simplex sealing rings (2 facing sterntube oil). The rotating liner is fixed to the shaft by a split clamp ring.
- The oil chamber is filled with lube oil and connected to the respective fwd seal tank (C).
- Oil circulation in the chamber is ensured without external devices by the shaft's rotation and internal circulator (Z) and fwd seal tank (C).

Configuration

Housing material		Liner coating		Bio-oil compatible
Cast iron	Bronze	Ceramic	Tungsten carbide	e.g. for VGP 2013
●	○	○	○	○

● Available/required ○ Available on request

Functional principle of sterntube lubrication

C = Tank for fwd seal with level alarm
Z = Circulator

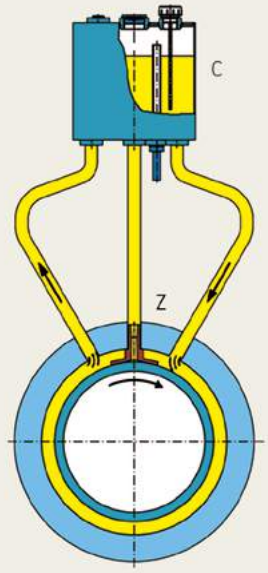

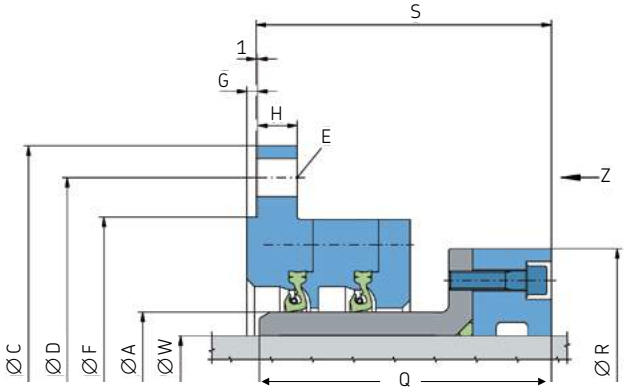

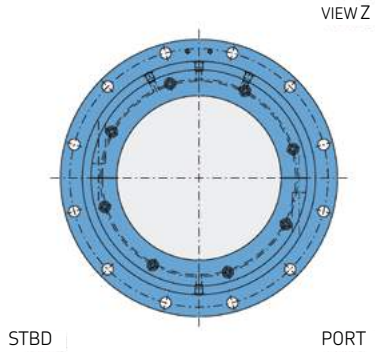

Simplex sterntube seals, oil-lubricated

A Size	W min	W max	C	D	E	F	G	H	Q	R	S [1]	Weight [2]
mm						mm						kg
125	80	110	275	245	8 x M12	210	6	15	149	190	142	26
140	111	125	290	260	8 x M12	225	6	15	149	210	142	26
160	126	145	310	280	8 x M12	245	6	15	149	230	142	30
180	146	165	330	300	8 x M12	265	6	15	149	250	142	33
200	166	185	350	320	8 x M12	285	6	15	149	260	142	35
220	186	205	370	340	8 x M12	305	6	15	149	280	142	38
240	206	225	425	390	12 x M16	345	6	20	159	300	155	53
260	226	245	445	410	12 x M16	365	6	20	159	320	155	57
280	246	265	465	430	12 x M16	385	6	20	164	350	160	64
300	266	285	485	450	12 x M16	405	6	20	164	370	160	68
330	286	315	515	480	12 x M16	435	6	20	164	400	160	79
355	316	339	565	525	12 x M20	475	7	25	185	430	187	107
380	340	362	590	550	12 x M20	500	7	25	185	460	187	116
400	363	381	610	570	12 x M20	520	7	25	190	480	192	122
420	382	400	630	590	12 x M20	540	7	25	190	500	192	128
450	401	428	675	630	12 x M20	575	8	30	205	530	208	164
480	429	457	705	660	12 x M20	605	8	30	205	560	208	176
500	458	476	725	680	12 x M20	625	8	30	205	580	208	174
530	477	504	755	710	12 x M20	655	8	30	205	620	208	200
560	505	532	820	765	12 x M24	700	9	35	221	650	226	250
600	533	570	860	805	12 x M24	740	9	35	221	690	226	281
630	571	598	890	835	12 x M24	770	9	35	238	720	243	299
670	599	635	930	875	12 x M24	810	9	35	238	760	243	334
710	636	672	990	930	16 x M24	865	10	40	268	830	271	445
750	673	710	1 030	970	16 x M24	905	10	40	318	870	321	548
800	711	756	1 090	1 030	20 x M24	960	10	40	337	915	338	637
850	757	803	1 140	1 080	20 x M24	1 010	10	40	337	974	338	698
900	804	851	1 200	1 135	20 x M24	1 065	11	45	349	1 027	353	800
950	852	896	1 250	1 185	20 x M24	1 115	11	45	349	1 076	353	846
975	897	927	1 300	1 235	20 x M24	1 165	11	45	349	1 130	353	875
1 000	928	952	1 300	1 235	20 x M24	1 165	11	45	349	1 130	353	831
1 030	953	982	1 400	1 325	24 x M30	1 245	11	50	389	1 200	395	1 113
1 060	983	1 007	1 400	1 325	24 x M30	1 245	11	50	389	1 200	395	1 078
1 090	1 008	1 032	1 460	1 385	24 x M30	1 305	11	50	399	1 260	406	1 233
1 120	1 033	1 056	1 460	1 385	24 x M30	1 305	11	50	399	1 260	406	1 212
1 180	1 057	1 116	1 520	1 445	24 x M30	1 365	11	50	399	1 340	406	1 454
1 250	1 117	1 186	1 595	1 520	24 x M30	1 440	12	50	408	1 410	413	1 634

[1] Incl. 1mm packing

[2] Weights may vary according to seal execution

Simplex Basic split design (EZ), SC3 – fwd seal

General description

- 2-ring fwd sterntube seal for standard applications
- Combinable with each aft seal
- Liner and housing are axially split

Function

- A stationary housing fixes the Simplex sealing rings (2 facing sterntube oil). The rotating liner is fixed to a split clamp ring.
- The oil chamber is filled with lube oil and connected to the respective fwd seal tank (C).
- Oil circulation in the chamber is ensured by the internal circulator (Z) and fwd seal tank (C).

Configuration

Split variations		Housing material		Liner coating		Bio-oil compatible
Split liner / Non-split housing	Split housing / Non-split liner	Cast iron	Bronze	Ceramic	Tungsten carbide	e.g. for VGP 2013
○	○	●	○	—	—	○

● Available/required ○ Available on request — Not available

Functional principle of sterntube lubrication

C = Tank for fwd seal with level alarm
Z = Circulator

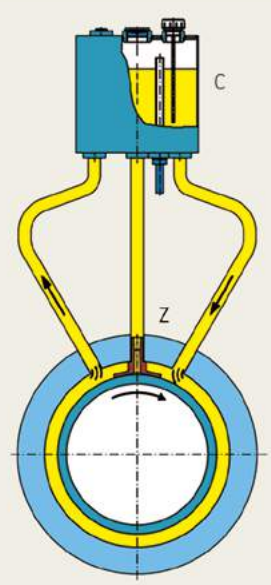

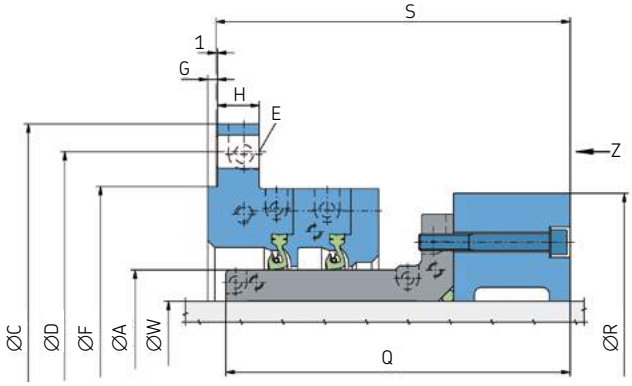

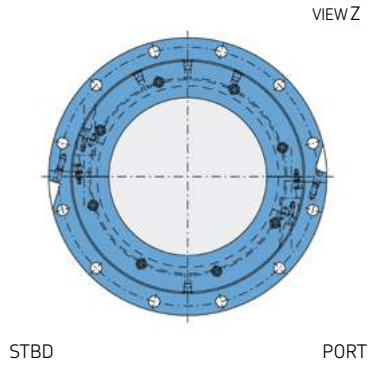

A Size	W min	W max	C	D	E	F	G	H	Q	R	S 1)	Weight 2)
mm						mm						kg
140	90	104	290	260	8 x M12	225	6	23	177	230	179	40
160	105	124	310	280	8 x M12	245	6	23	177	244	179	45
180	125	144	330	300	8 x M12	265	6	23	183	270	185	53
200	145	164	350	320	8 x M12	285	6	23	183	280	185	56
220	165	184	370	340	8 x M12	305	6	23	196	320	198	69
240	185	204	425	390	12 x M16	345	6	24	211	340	213	88
260	205	224	445	410	12 x M16	365	6	24	211	360	213	94
280	225	244	465	430	12 x M16	385	6	24	211	376	213	100
300	245	264	485	450	12 x M16	405	6	24	211	392	213	106
330	265	294	515	480	12 x M16	435	6	24	230	436	232	135
355	295	319	565	525	12 x M20	475	7	30	248	466	255	170
380	320	344	590	550	12 x M20	500	7	30	248	490	255	181
400	345	364	610	570	12 x M20	520	7	30	248	510	255	186
420	365	384	630	590	12 x M20	540	7	30	248	522	255	191
450	385	415	675	630	12 x M20	575	8	30	279	530	284	227
480	416	445	705	660	12 x M20	605	8	30	279	560	284	241
500	446	464	725	680	12 x M20	625	8	30	279	580	284	240
530	465	494	755	710	12 x M20	655	8	30	279	620	284	274
560	495	523	820	765	12 x M24	700	9	35	317	670	327	360
600	524	558	860	805	12 x M24	740	9	35	319	704	327	398
630	559	588	890	835	12 x M24	770	9	35	319	736	327	412
670	589	628	930	875	12 x M24	810	9	35	391	790	399	556
710	629	662	990	930	16 x M24	865	10	40	425	834	432	678
750	663	702	1 030	970	16 x M24	905	10	40	425	868	432	719
800	703	752	1 090	1 030	20 x M24	960	10	40	475	940	481	925
850	753	801	1 140	1 080	20 x M24	1 010	10	40	475	986	481	975
900	802	851	1 200	1 135	20 x M24	1 065	11	45	489	1 030	499	1 081
950	852	901	1 250	1 185	20 x M24	1 115	11	45	567	1 116	577	1 436
1 000	902	950	1 300	1 235	20 x M24	1 165	11	45	567	1 166	577	1 512

1) Incl. 1mm packing

2) Weights may vary according to seal execution

Sterntube lubrication principles

General description

- Sterntube lubrication and cooling have significant influence on the correct functioning of the sterntube components.
- The required oil pressure depends on various parameters and will be individually calculated by SKF Marine for each application.

Three well-proven designs for sterntube lubrication and cooling:

Sterntube with natural circulation

- The pressure inside the sterntube is defined by the height of the sterntube header tank.
- The oil, heated by the friction losses in the propeller shaft bushes, flows upwards to the gravity tank where it is cooled down by convection.
- Cooled lube oil is transferred downwards to the sterntube.
- This system allows a basic level of oil circulation and cooling by means of natural circulation without external devices. Furthermore, installation is easy.

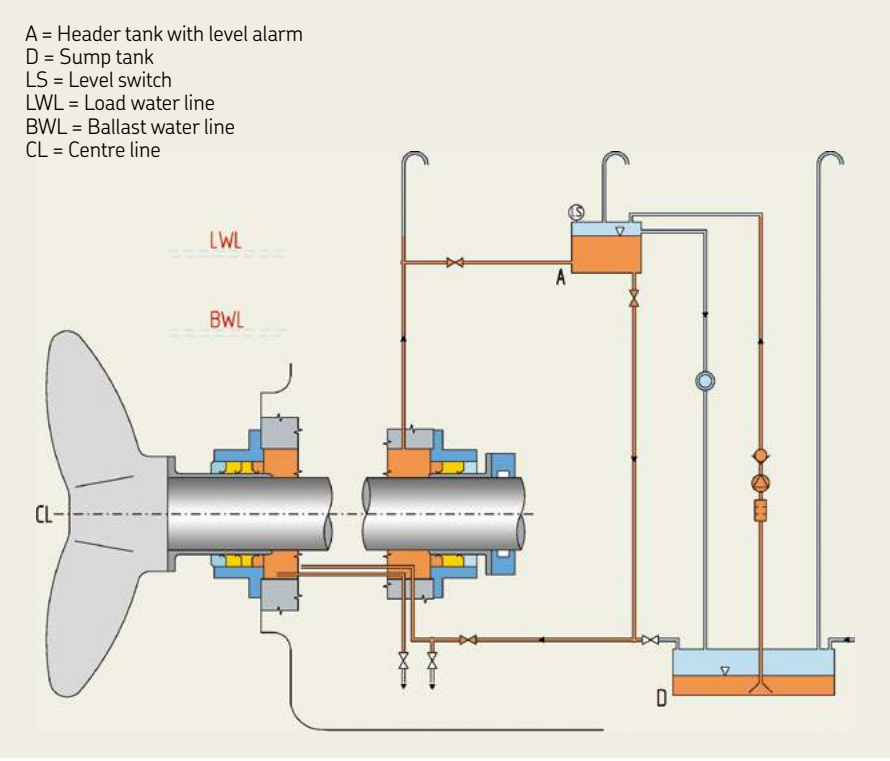

Sterntube with forced lubrication

- Can be combined with all sealing systems as an option.
- The pressure inside the sterntube is defined by the height of the oil return line.
- External pumps continuously fill the header tank with lube oil from the sump tank, which then passes through an optional filter and cooler.
- From the gravity tank, cooled lube oil flows into the sterntube, entering near the aft sterntube bearing where most heat will be generated.
- From there, the heated oil returns through the vent pipe and return line (located one metre below the oil level in the header tank) back to the sump tank.
- The forced circulation allows optimal oil circulation and cooling of the bush bearings and also provides a high level of safety through static pressure settings.

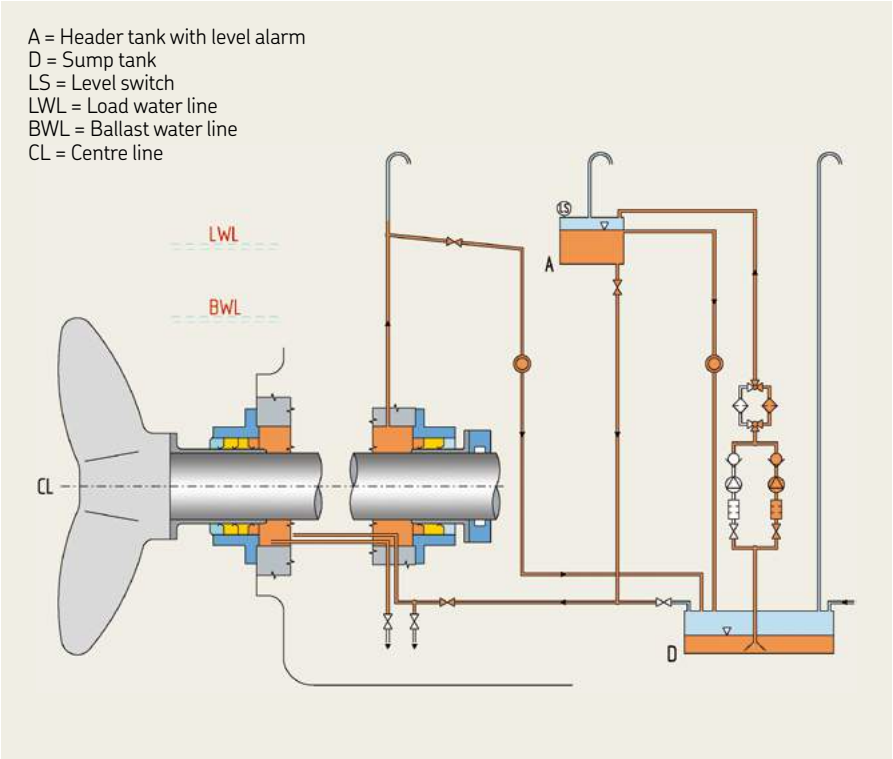

Sterntube with direct forced lubrication

- Can be combined with all sealing systems as an option.
- The sterntube lube oil that is pumped from the sump tank passes through a cooler and filter directly into the sterntube, entering near the aft sterntube bearing where most heat will be generated.
- Heated oil returns through the vent line to the sterntube header tank and overflows into the sump tank.
- The direct forced circulation results in optimal cooling of the sterntube bush bearings and lube oil lubrication.
- Since the lube oil is fed directly into the sterntube by a pump, care must be taken to avoid any overpressure inside the sterntube.
- If required, our specialist engineers are on hand to advise on these technical matters, and on selecting the appropriate pump and cooling equipment.

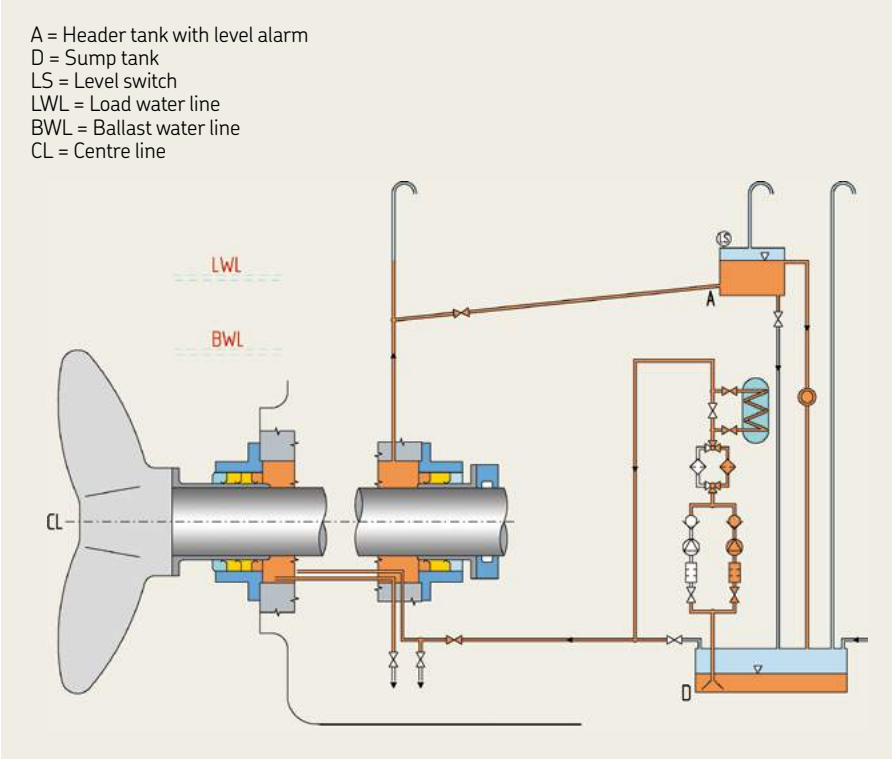

Modular sterntube lubrication and cooling units

General description

- Skid-mounted units with standard components ready-assembled
- For operations with forced or direct forced lubrication
- Power supply 440 V, 60 Hz

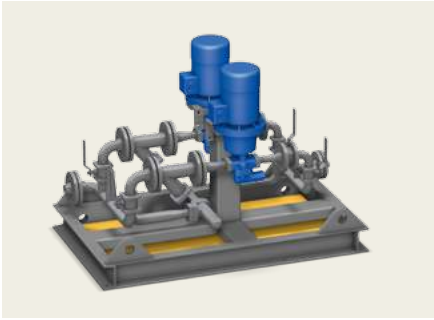

Pump unit

- Local instrumentation
- Internal piping with valves
- 2x non-return valves
- 2x gear pumps
- 2x strainers

Pump and filter unit

Pump unit design with additional

- Double filter
- Pressure switch

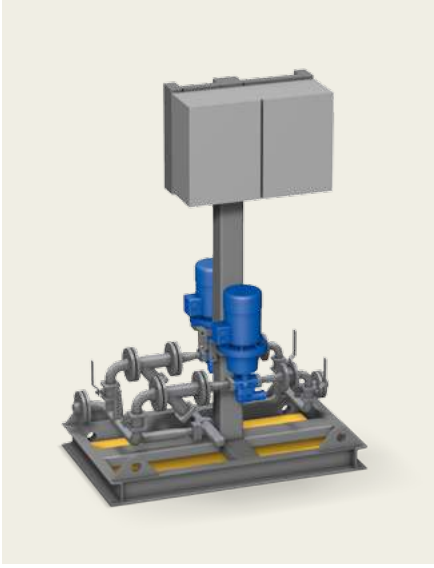

Controlled lubrication unit

Pump unit design with additional

- Pressure switch
- Control panel (with remote control ability)

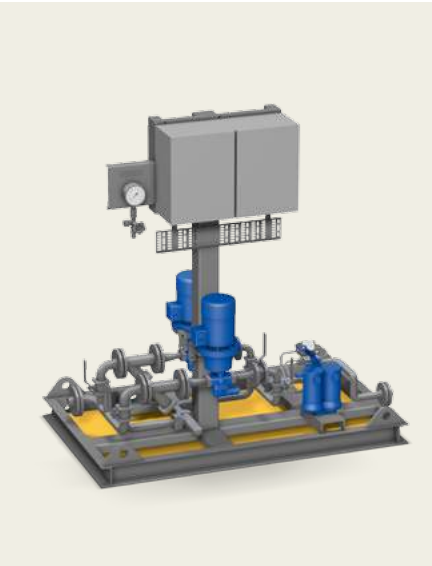

Controlled lubrication unit

Pump unit design with additional

- Double filter
- Pressure switch
- Control panel (with remote control ability)

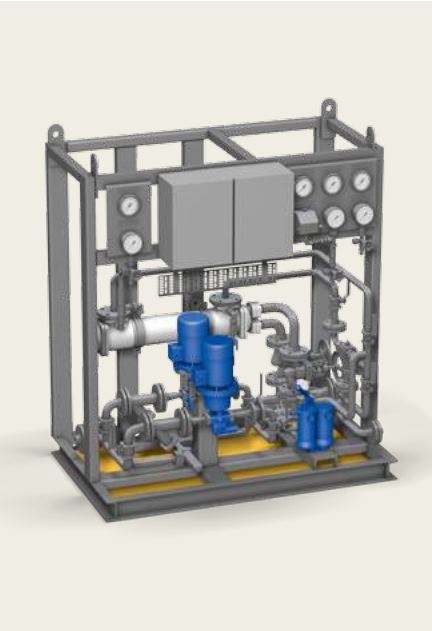

Complete lubrication unit (specially for direct forced lubrication)

- Rack-mounted instrumentation
- Internal piping with valves
- 2x non-return valves
- 2x gear pumps
- 2x strainers
- Double filter
- Pressure switch
- Control panel (with remote control ability)
- Tube bundle cooler for fresh water cooling

Simplex seal size	Gear pump delivery volume	Double filter volume	Cooler capacity
mm	m^3/h	m^3/h	kW
600 – 670	0.9	1.7	13
710 – 850	1.6	1.7	23
900 – 975	2.5	4.5	33
1 000 – 1 090	3.2	4.5	44
1 120 – 1 250	4.0	4.5	61

Note: With **direct forced lubrication**, the shipyard must match the pipe cross-section and length to the pump's performance.

Simplex Net protector

General description

- Dirt and net protection ring
- Effective aft seal protection against dirt, fishing nets and lines
- For seal sizes 125 – 1 060 (larger sizes on request)
- Fitted in front of the first sealing ring facing seawater
- Split design

Housing ring material:

- Cast iron
- Bronze
- Composite (GRP)

Protective polyurethane ring

- Resistant to hydrolysis
- Abrasion-resistant
- Optimal friction behaviour
- Rotates with the liner

Application

- For all Simplex aft seal types
- For new-build and retrofit applications (sufficient installation length provided)

Please contact SKF Marine for feasibility check.

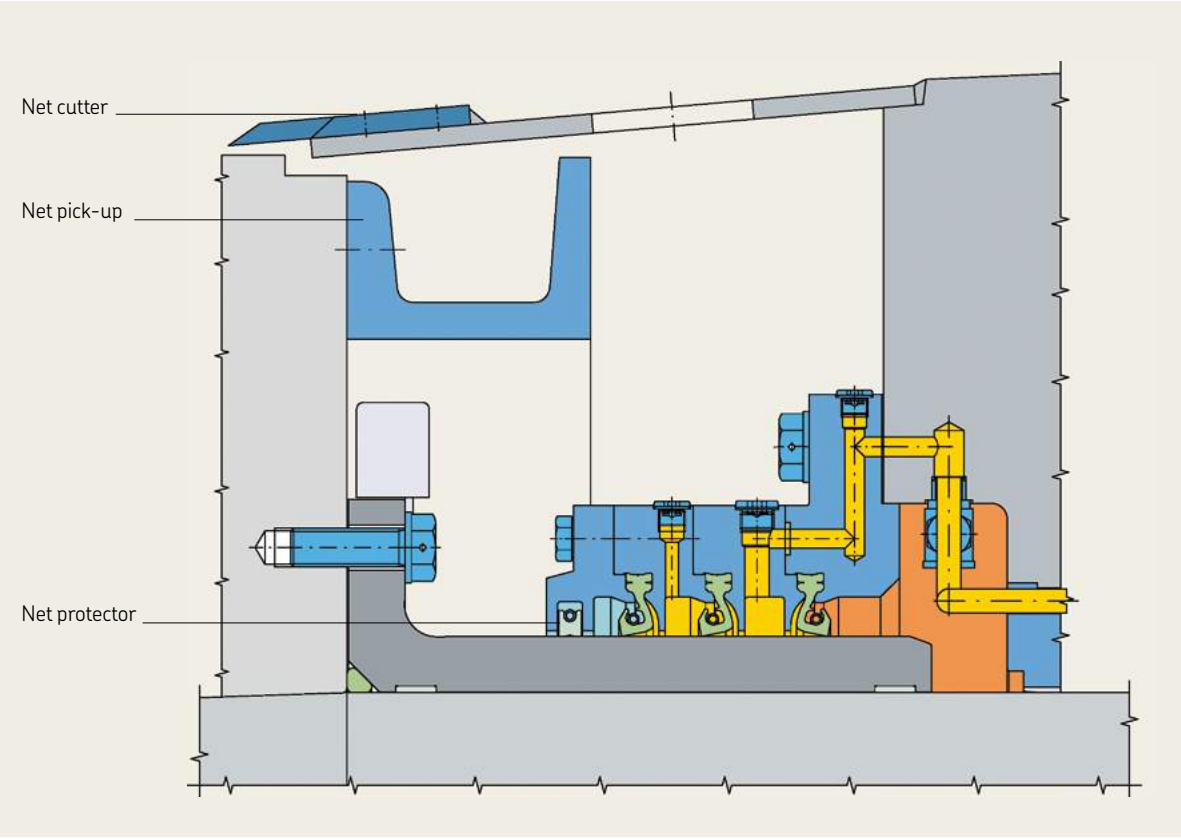

Cover ring

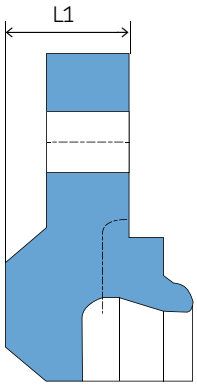

Cover ring for Net protector

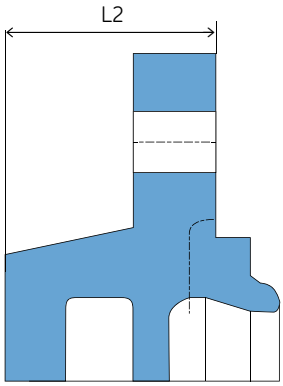

Simplex seal size (SC2 / SC3)	L1 - Installation length cover ring	L2 - Installation length cover ring for Net protector	Difference in installation length
mm			
125 - 220	14	22	8
240 - 330	15	23.5	8.5
355 - 420	18	26	8
450 - 530	21	31	10
560 - 670	23	32	9
710 - 750	28	36	8
800 - 850	32	39	7
900 - 950	36	42	6
975 - 1 000	36	42	6
1 030 - 1 180	41	45	4
1 250	41	47	6

Simplex Net pick-up

General description

- Prevents nets and fishing lines from entering the aft seal
- Complementary component to the aft seal

Material:
- Bronze
- Composite (GRP)

Application

- For all Simplex aft seal types
- For new-build and retrofit applications (sufficient installation length provided)

Function

- Netting and fishing lines not fended off by the rope guard are taken up by the net pick-up ring with its L or U-shaped cross-section.
- As increasing amounts of netting or lines fill up the ring the entry gap decreases and finally closes completely.
- The flow of water towards the propeller is not changed by this proven and functionally reliable component.

Simplex Net cutter

Function

- The net cutter knife is welded to the rope guard.
- A fishing line or net that may rotate with the propeller will be cut.

Application

- For all Simplex aft seal types
- For new-build and retrofit applications

Simplan-fwd seal

General description

- Mechanical face type seal for water-lubricated sterntubes
- Silicon carbide sealing ring material: wear-resistant
- Equipped with an additional inflatable standstill seal (Pneumostop)
- No shaft wear

Housing material:

- Bronze
- Aluminium
- Composite (GRP) up to size 225

Please note: Dimensions of the Simplan with aluminium and GRP housing will differ from the data shown in the table.

Function

- A stationary ring (1) and a rotating sealing ring (2) form the axial seal.
- The rotating sealing ring is fixed to a rubber pressure body (3).
- This pressure body is held on the shaft by a clamp ring (4) and is pre-loaded to ensure the necessary contact pressure between the stationary ring (1) and the rotating sealing ring (2).
- The Pneumostop is an inflatable tube ring (5) and operates as a static seal at standstill only.
- This Pneumostop can be inflated by an air supply line (V1 open, V2 shut).
- A water supply line provides the sterntube bushes (6) with a constant supply of flush water.
- A small amount of flush water is needed for flushing the permanently vented seal chamber.

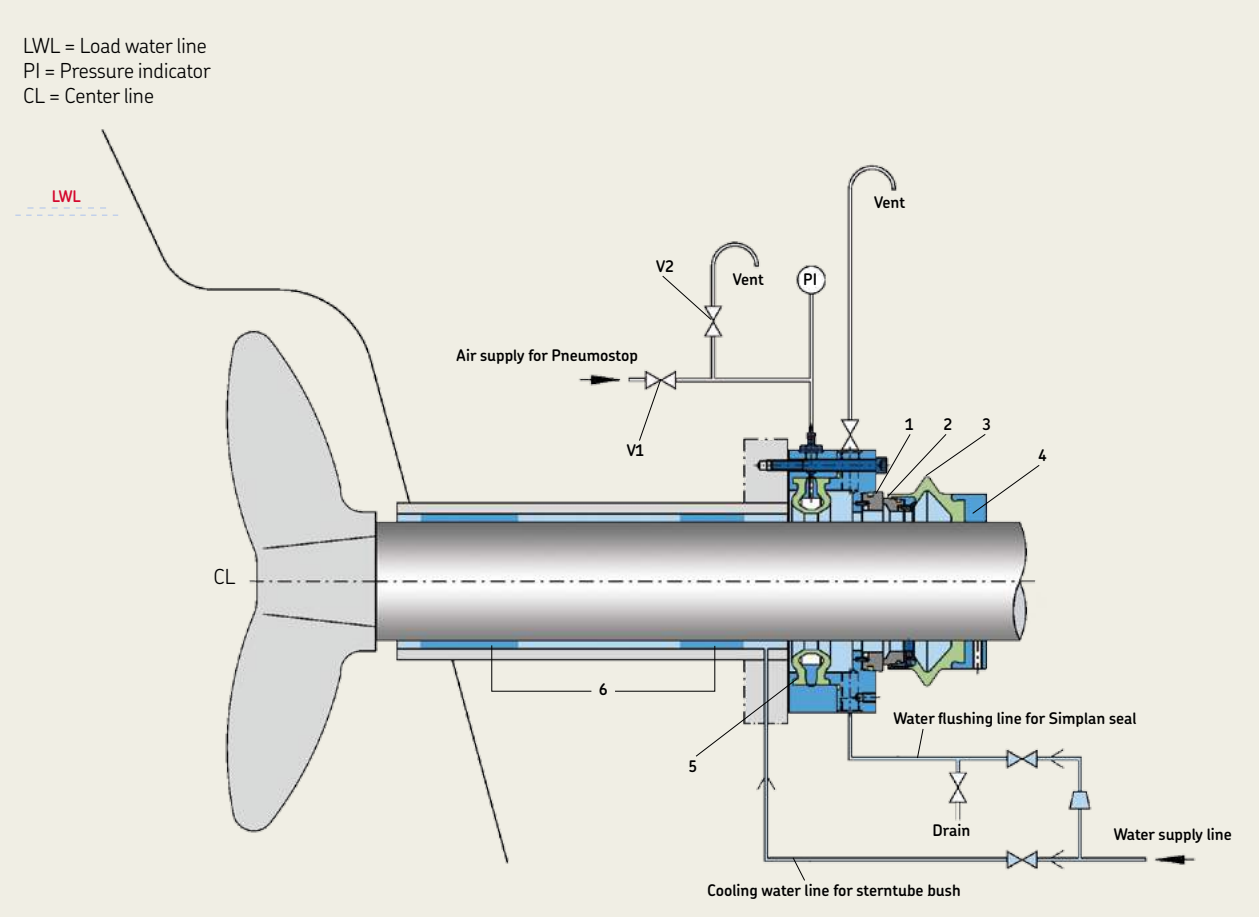

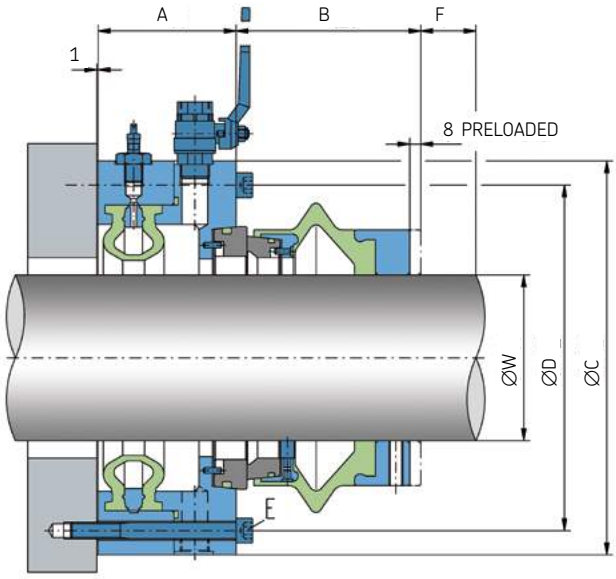

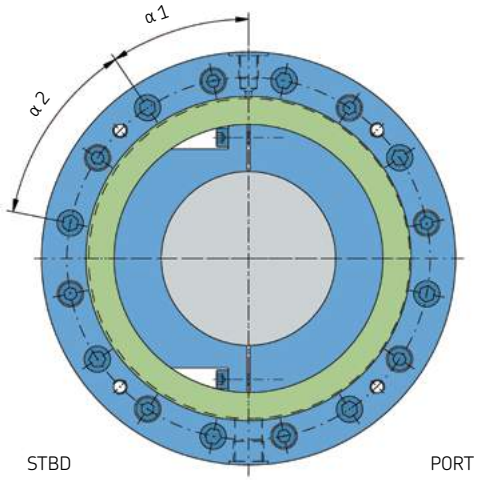

The drawings and data refer to the Simplan with bronze housing.

Size	W min	W max	A	B [1]	C	D	E	F	α1	α2	Weight [2]
mm								mm			kg
50	50	59	100	114	225	190	6 x M12	40	45°	60°	26.5
60	60	69	100	114	225	190	6 x M12	40	45°	60°	26.5
70	70	79	100	114	235	200	6 x M12	40	45°	60°	28.5
80	80	89	100	114	245	210	6 x M12	40	45°	60°	30
90	90	104	100	134	255	220	8 x M12	40	33.75°	45°	31.5
105	105	119	100	134	270	235	8 x M12	40	33.75°	45°	35
120	120	134	100	134	285	250	8 x M12	40	33.75°	45°	38
135	135	149	100	134	300	265	8 x M12	40	33.75°	45°	40.5
150	150	164	100	134	315	280	8 x M12	40	33.75°	45°	44.5
165	165	179	100	134	330	295	8 x M12	40	33.75°	45°	49
180	180	194	100	134	345	310	8 x M12	40	33.75°	45°	53.5
195	195	209	100	146	370	335	8 x M16	40	33.75°	45°	58.5
210	210	224	100	146	385	350	8 x M16	40	33.75°	45°	63
225	225	239	100	146	400	365	8 x M16	40	33.75°	45°	66.5
240	240	259	100	167	430	390	12 x M16	40	15°	30°	86
260	260	279	100	167	450	410	12 x M16	40	15°	30°	91
280	280	299	100	167	470	430	12 x M16	40	15°	30°	96
300	300	319	100	167	490	450	12 x M16	40	15°	30°	101
320	320	339	100	167	510	470	12 x M16	40	15°	30°	106
340	340	359	115	175.5	545	500	12 x M20	50	15°	30°	148
360	360	379	115	175.5	565	520	12 x M20	50	15°	30°	153
380	380	399	115	175.5	585	540	12 x M20	50	15°	30°	159
400	400	419	115	175.5	605	560	12 x M20	50	15°	30°	170

[1] With sealing rings in direct contact [2] Weights may vary according to seal execution

Simplex Basic water-lubricated (ZW-P), SC3 – fwd seal

General description

- 2-ring forward sterntube sealing system for water-lubricated sterntubes
- Additional emergency seal Pneumostop which is inflatable at standstill
- Available as a split and not-split version

Function

- The forward Simplex seal consists of the stationary housing, fixed at the forward sterntube boss and the liner on the rotating propeller shaft, fixed by a clamp ring.
- The housing contains two sealing rings.
- Two sealing rings facing the sterntube. The chamber inbetween is lubricated by a header tank.
- This water in the chamber cools and lubricates both sealing rings. When the shaft is rotating, the internal circulator, located between the two sealing rings, ensures a water circulation through the seal header tank for cooling.
- The seal is equipped with a pneumatically actuated Pneumostop standstill seal to assist during mounting and inspection (no docking of the vessel required) and as an emergency seal with the shaft at standstill.

T = Water tank
LS = Level switch
S = Sterntube
D = Drain
W = Water supply for flushing and cooling
PI = Pressure indicator
A = Air supply for Pneumostop
V1 = Vent
V2 = Vent
CL = Center line

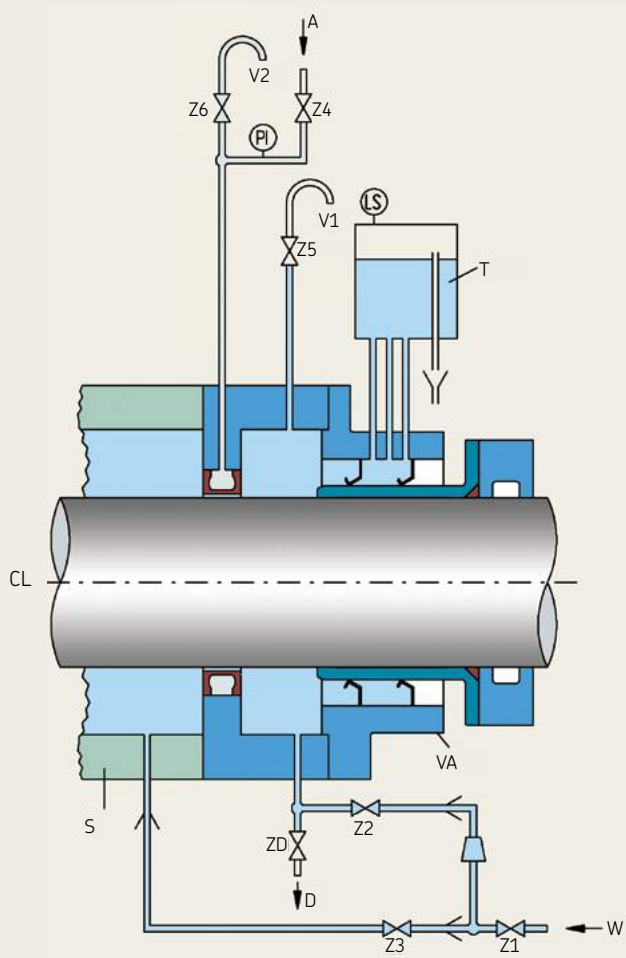

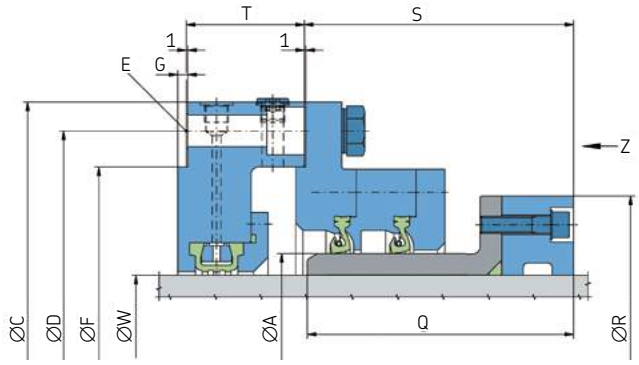

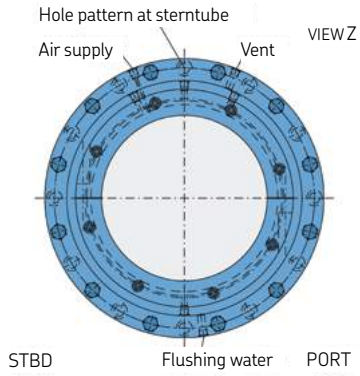

A Size	W min	W max	C	D	E	F	G	Q	R	S 1)	T 1)	Weight 2)
mm						mm						kg
125	80	110	275	245	8 x M12	210	6	149	200	142	85	58
140	111	125	290	260	8 x M12	225	6	149	230	142	85	61
160	126	145	310	280	8 x M12	245	6	149	244	142	85	68
180	146	165	330	300	8 x M12	265	6	149	270	142	85	75
200	166	185	350	320	8 x M12	285	6	149	280	142	85	80
220	186	205	370	340	8 x M12	305	6	149	300	142	85	87
240	206	225	425	390	12 x M16	345	6	164	340	160	85	124
260	226	245	445	410	12 x M16	365	6	164	360	160	85	132
280	246	265	465	430	12 x M16	385	6	164	376	160	85	140
300	266	285	485	450	12 x M16	405	6	164	392	160	85	147
330	286	315	515	480	12 x M16	435	6	164	422	160	85	166
355	316	339	565	525	12 x M20	475	7	190	445	191	85	215
380	340	362	590	550	12 x M20	500	7	190	475	191	85	231
400	363	381	610	570	12 x M20	520	7	190	495	191	85	238
420	382	400	630	590	12 x M20	540	7	190	515	191	85	249
450	401	428	675	630	12 x M20	575	8	210	550	213	92	321
480	429	457	705	660	12 x M20	605	8	210	580	213	92	342
500	458	476	725	680	12 x M20	625	8	210	600	213	92	343
530	477	504	755	710	12 x M20	655	8	210	630	213	92	377
560	505	532	820	765	12 x M24	700	9	236	660	241	95	483
600	533	570	860	805	12 x M24	740	9	236	704	241	95	536
630	571	598	890	835	12 x M24	770	9	238	736	243	95	550
670	599	635	930	875	12 x M24	810	9	238	790	243	95	614
710	636	672	990	930	16 x M24	865	10	318	830	321	115	852
750	673	710	1 030	970	16 x M24	905	10	318	870	321	115	904
800	711	756	1 090	1 030	20 x M24	960	10	337	915	338	125	1 054
850	757	803	1 140	1 080	20 x M24	1 010	10	337	974	338	125	1 142
900	804	851	1 200	1 135	20 x M24	1 065	11	364	1 027	368	120	1 306
950	852	896	1 250	1 185	20 x M24	1 115	11	364	1 076	368	120	1 378
975	897	927	1 300	1 235	20 x M24	1 165	11	364	1 130	368	120	1 436
1 000	928	952	1 300	1 235	20 x M24	1 165	11	364	1 130	368	120	1 369

1) Incl. 1 mm packing

2) Weights may vary according to seal execution

Simplex Basic water-lubricated split liner design (FZW-P), SC3 - fwd seal

General description

- 2-ring forward sterntube sealing system for water-lubricated stern tubes
- Both sealing rings face seawater
- With accompanying water tank, connecting pipes and valves
- Additional sealing ring Pneumostop which is inflatable at standstill
- The housing is non-split and the liner is axially split

Function

- The forward Simplex seal consists of the stationary housing, fixed at the forward sterntube boss, and the liner on the rotating propeller shaft, fixed using a clamp ring.
- The housing contains two sealing rings.
- One ring seals against the water in the sterntube. The second ring seals against the water in the chamber between the two seal rings.
- The water in the chamber cools and lubricates both sealing rings. When the shaft is rotating, the internal circulator, located between the two sealing rings, ensures water circulation through the respective seal header tank for cooling.
- The seal is equipped with a pneumatically actuated Pneumostop standstill seal to assist during mounting and inspection (no docking of the vessel required) and as an emergency seal with the shaft at standstill.

T = Water tank
LS = Level switch
S = Sterntube
D = Drain
W = Water supply for flushing and cooling
PI = Pressure indicator
A = Air supply for Pneumostop
V1 = Vent
V2 = Vent
CL = Center line

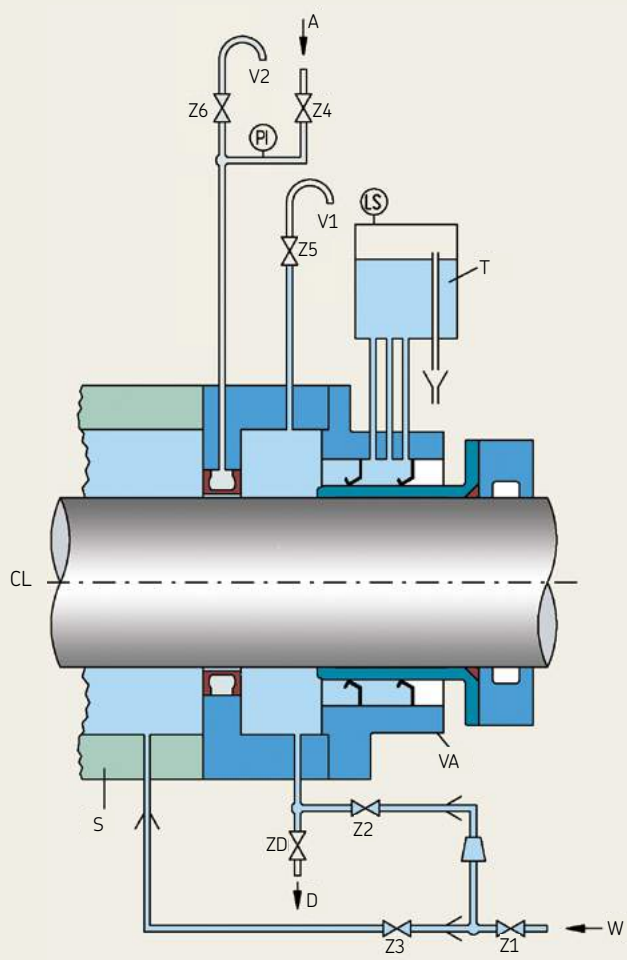

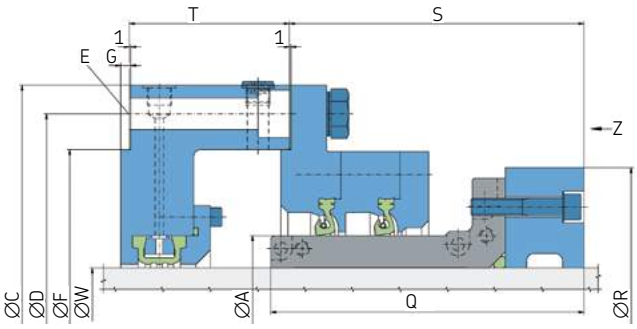

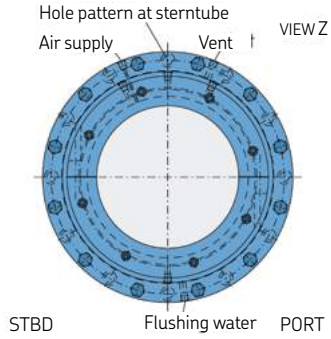

A Size	W min	W max	C	D	E	F	G	Q	R	S 1)	T 1)	Weight 2)
mm						mm						kg
140	90	104	290	260	8 x M12	225	6	171	230	153	105	74
160	105	124	310	280	8 x M12	245	6	171	244	153	105	83
180	125	144	330	300	8 x M12	265	6	171	270	153	105	92
200	145	164	350	320	8 x M12	285	6	171	280	153	105	98
220	165	184	370	340	8 x M12	305	6	171	300	153	105	106
240	185	204	425	390	12 x M16	345	6	191	340	174	109	150
260	205	224	445	410	12 x M16	365	6	191	360	174	109	160
280	225	244	465	430	12 x M16	385	6	191	376	174	109	170
300	245	264	485	450	12 x M16	405	6	191	392	174	109	180
330	265	294	515	480	12 x M16	435	6	191	422	174	109	202
355	295	319	565	525	12 x M20	475	7	219	445	206	112	260
380	320	344	590	550	12 x M20	500	7	219	475	206	112	280
400	345	364	610	570	12 x M20	520	7	219	495	201	112	285
420	365	384	630	590	12 x M20	540	7	219	515	201	112	297
450	385	415	675	630	12 x M20	575	8	242	550	226	117	376
480	416	445	705	660	12 x M20	605	8	242	580	226	117	397
500	446	464	725	680	12 x M20	625	8	242	600	226	117	397
530	465	494	755	710	12 x M20	655	8	242	630	226	117	437
560	495	523	820	765	12 x M24	700	9	271	660	261	130	561
600	524	558	860	805	12 x M24	740	9	273	704	261	130	621
630	559	588	890	835	12 x M24	770	9	273	736	261	130	640
670	589	628	930	875	12 x M24	810	9	273	790	261	130	707
710	629	662	990	930	16 x M24	865	10	357	830	344	145	953
750	663	702	1 030	970	16 x M24	905	10	357	870	344	145	1 017
800	703	752	1 090	1 030	20 x M24	960	10	373	915	356	150	1 158
850	753	801	1 140	1 080	20 x M24	1 010	10	373	974	356	150	1 242
900	802	851	1 200	1 135	20 x M24	1 065	11	402	1 027	385	145	1 417
950	852	901	1 250	1 185	20 x M24	1 115	11	402	1 076	385	145	1 487
1 000	902	950	1 300	1 235	20 x M24	1 165	11	402	1 130	385	145	1 571

1) Incl. 1 mm packing

2) Weights may vary according to seal execution

Simplex Basic water-lubricated fully split design (EZW-P), SC3 – fwd seal

General description

- 2-ring forward sterntube sealing system for water-lubricated stern tubes
- Both sealing rings face seawater
- With accompanying water tank, connecting pipes and valves
- Additional sealing ring Pneumostop which is inflatable at standstill
- Housing and liner are the axially split version

Function

- The forward Simplex seal consists of the stationary housing, fixed at the forward sterntube boss, and the liner on the rotating propeller shaft, fixed using a clamp ring.
- The housing contains two sealing rings.
- One ring seals against the water in the sterntube. The second ring seals against the water in the chamber between the two seal rings.
- The water in the chamber cools and lubricates both sealing rings. When the shaft is rotating, the internal circulator, located between the two sealing rings, ensures water circulation through the respective seal header tank for cooling.
- The seal is equipped with a pneumatically actuated Pneumostop standstill seal to assist during mounting and inspection (no docking of the vessel required) and as an emergency seal with the shaft at standstill.

T = Water tank
LS = Level switch
S = Sterntube
D = Drain
W = Water supply for flushing and cooling
PI = Pressure indicator
A = Air supply for Pneumostop
V1 = Vent
V2 = Vent
CL = Center line

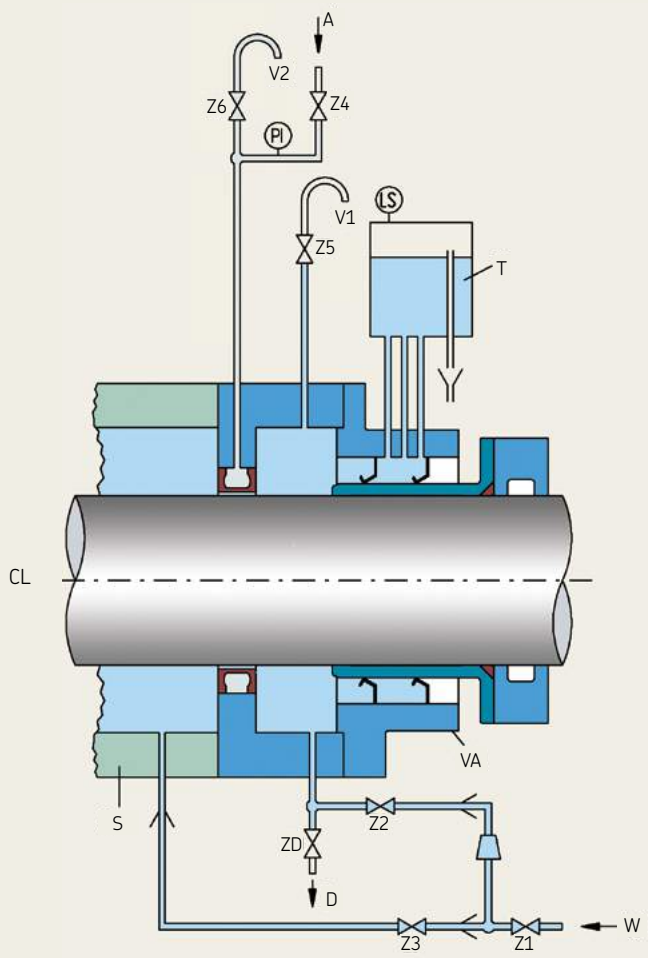

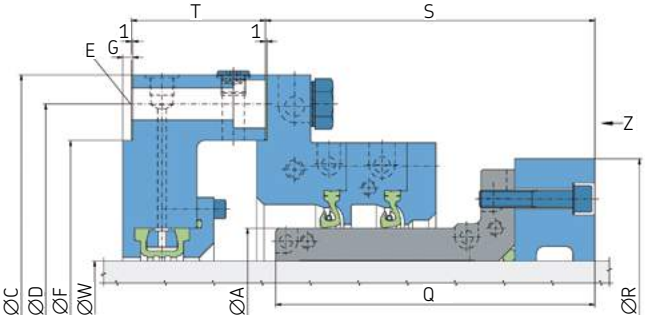

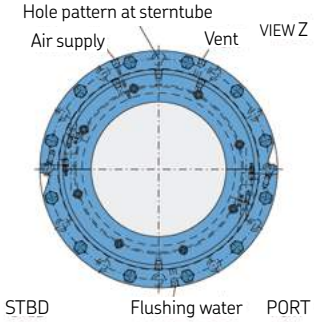

A Size	W min	W max	C	D	E	F	G	Q	R	S 1)	T 1)	Weight 2)
mm						mm						kg
140	90	104	290	260	8 x M12	225	6	171	230	173	85	74
160	105	124	310	280	8 x M12	245	6	171	244	173	85	83
180	125	144	330	300	8 x M12	265	6	171	270	173	85	92
200	145	164	350	320	8 x M12	285	6	171	280	173	85	99
220	165	184	370	340	8 x M12	305	6	171	300	173	85	107
240	185	204	425	390	12 x M16	345	6	191	340	193	89	149
260	205	224	445	410	12 x M16	365	6	191	360	193	89	159
280	225	244	465	430	12 x M16	385	6	191	376	193	89	169
300	245	264	485	450	12 x M16	405	6	191	392	193	89	179
330	265	294	515	480	12 x M16	435	6	191	422	193	89	201
355	295	319	565	525	12 x M20	475	7	219	445	226	92	260
380	320	344	590	550	12 x M20	500	7	219	475	226	92	278
400	345	364	610	570	12 x M20	520	7	219	495	221	92	286
420	365	384	630	590	12 x M20	540	7	219	515	221	92	298
450	385	415	675	630	12 x M20	575	8	242	550	247	97	372
480	416	445	705	660	12 x M20	605	8	242	580	247	97	393
500	446	464	725	680	12 x M20	625	8	242	600	247	97	393
530	465	494	755	710	12 x M20	655	8	242	630	247	97	433
560	495	523	820	765	12 x M24	700	9	271	660	281	110	554
600	524	558	860	805	12 x M24	740	9	273	704	281	110	614
630	559	588	890	835	12 x M24	770	9	273	736	281	110	633
670	589	628	930	875	12 x M24	810	9	273	790	281	110	699
710	629	662	990	930	16 x M24	865	10	357	830	362	125	944
750	663	702	1 030	970	16 x M24	905	10	357	870	362	125	1 008
800	703	752	1 090	1 030	20 x M24	960	10	373	915	379	130	1 154
850	753	801	1 140	1 080	20 x M24	1 010	10	373	974	379	130	1 237
900	802	851	1 200	1 135	20 x M24	1 065	11	402	1 027	412	120	1 407
950	852	901	1 250	1 185	20 x M24	1 115	11	402	1 076	412	120	1 477
1 000	902	950	1 300	1 235	20 x M24	1 165	11	402	1 130	412	120	1 560

1) Incl. 1 mm packing

2) Weights may vary according to seal execution

Centrax bulkhead seal

General description

- The Centrax bulkhead seal is used exclusively to seal rotating shafts at bulkheads to avoid the flooding of related compartments
- Radial and axial movements of the shaft are easily tolerated by the Centrax seal
- Due to the good self-lubricating properties of the sealing rings, no additional lubrication is required.
- Fully split design, insitu installation and maintenance without shaft removal
- To cover a bulkhead shaft hole with a larger diameter, an adapter ring (split version) is available in the required size as an option

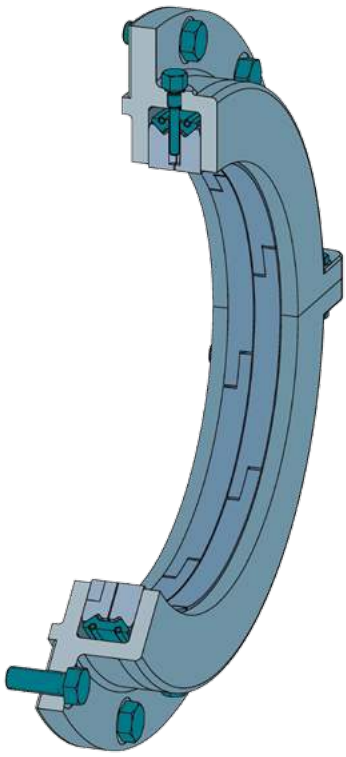

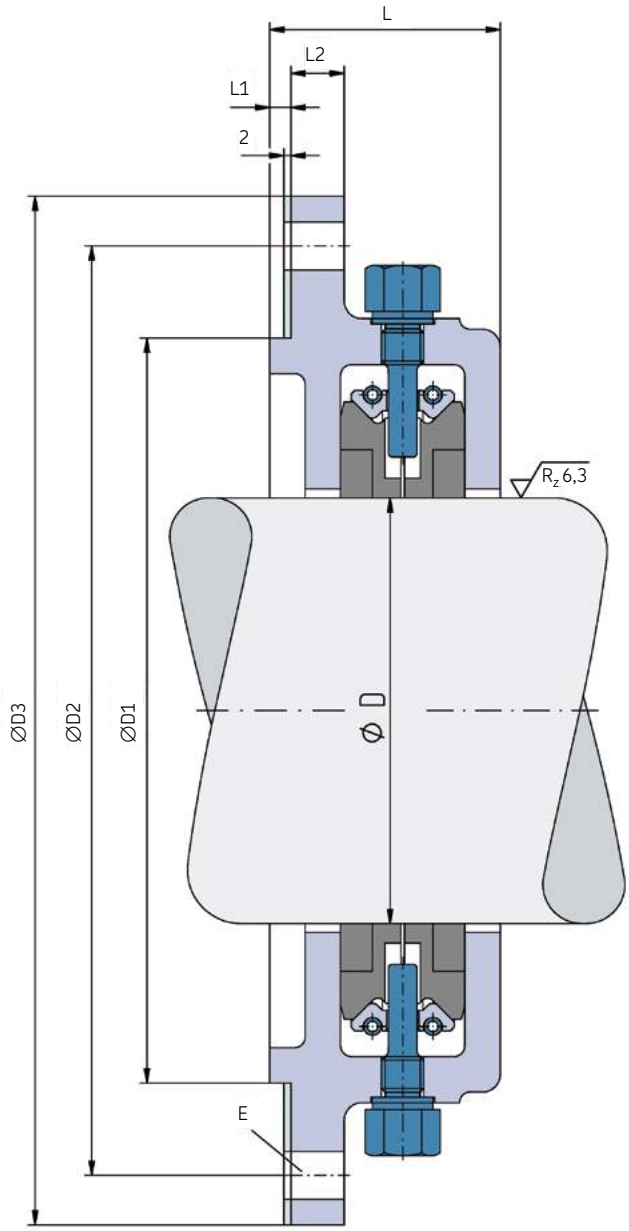

Size	Shaft diameter D	D1	D2	D3	E	L	L1	L2
	mm							
60	50 - 60	130	175	200	8 x M8	62	6	13
70	61 - 70	140	185	210	8 x M8	62	6	13
80	71 - 80	150	195	220	8 x M8	62	6	13
90	81 - 90	160	205	230	8 x M8	62	6	13
100	91 - 100	170	215	240	8 x M8	62	6	13
120	101 – 120	210	262	290	8 x M12	65	6	15
140	121 – 140	230	282	310	8 x M12	65	6	15
160	141 – 160	250	302	330	8 x M12	65	6	15
180	161 – 180	270	322	350	8 x M12	65	6	15
200	181 – 200	290	342	370	8 x M12	65	6	15
220	201 – 220	325	390	430	8 x M12	79	6	20
240	221 – 240	345	410	450	8 x M12	79	6	20
260	241 – 260	365	430	470	12 x M16	79	6	20
280	261 – 280	385	450	490	12 x M16	79	6	20
300	281 – 300	405	470	510	12 x M16	79	6	20
320	301 – 320	425	490	530	12 x M16	79	6	20
340	321 – 340	445	510	550	12 x M16	79	6	20
360	341 – 360	480	560	610	12 x M20	86	8	23
380	361 – 380	500	580	630	12 x M20	86	8	23
400	381 – 400	520	600	650	12 x M20	86	8	23
420	401 – 420	540	620	670	12 x M20	86	8	23
440	421 – 440	560	640	690	12 x M20	86	8	23
460	441 – 460	580	660	710	12 x M20	86	8	23
480	461 – 480	600	680	730	12 x M20	86	8	23
500	481 – 500	620	700	750	12 x M20	86	8	23
520	501 – 520	640	725	775	16 x M20	93	8	27
540	521 – 540	660	745	795	16 x M20	93	8	27
560	541 – 560	680	765	815	16 x M20	93	8	27
580	561 – 580	700	785	835	16 x M20	93	8	27
600	581 – 600	720	805	855	16 x M20	93	8	27
620	601 – 620	740	825	875	16 x M20	93	8	27
640	621 – 640	760	845	895	16 x M20	93	8	27
660	641 – 660	790	885	945	16 x M24	103	8	33
680	661 – 680	810	905	965	16 x M24	103	8	33
700	681 – 700	830	925	985	16 x M24	103	8	33
720	701 - 720	850	945	1 005	16 x M24	103	8	33
740	721 - 740	870	965	1 025	16 x M24	103	8	33
760	741 – 760	890	985	1 045	16 x M24	103	8	33
780	761 – 780	910	1 005	1 065	16 x M24	103	8	33
800	781 – 800	930	1 025	1 085	16 x M24	103	8	33
820	801 - 820	950	1 045	1 105	16 x M24	103	8	33
840	821 - 840	970	1 065	1 125	20 x M24	103	8	33
860	841 - 860	990	1 085	1 145	20 x M24	103	8	33

Simplex Gas-tight bulkhead seal (ZBS)

General description

- The Simplex Gas-tight bulkhead seal is designed for a gas- and watertight sealing of shafts, leading through bulkheads
- The standard version offered to our customers is of oil-lubricated design with an additional 15/30 l oil tank for the best cooling and lubrication
- The grease-lubricated design is supplied to vessels that have the highest circumferential shaft speeds and are equipped with automatic grease dosing units

Application

- Offshore supply vessels
- Chemical tanker
- Gas tankers

Configuration

Housing material		Liner material		Upgrades	
Cast iron	Bronze	Cast iron	Chrome steel	Adapater ring	Ex-proof design
●	○	●	○	○	○

● Available/required ○ Available on request

Oil-lubricated design

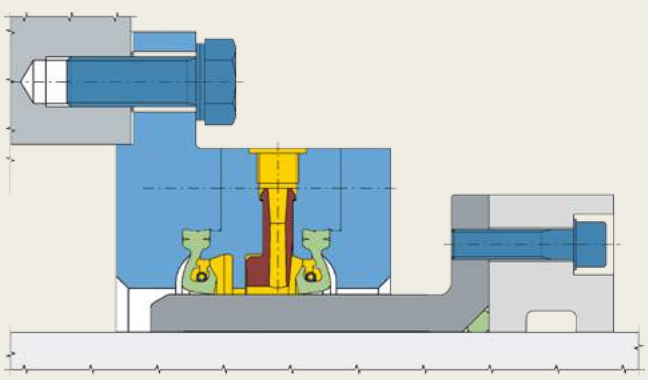

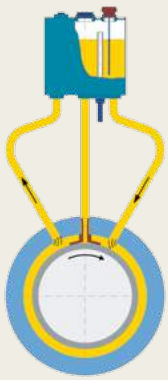

Oil lubrication by oil tank and circulator

Grease-lubricated design

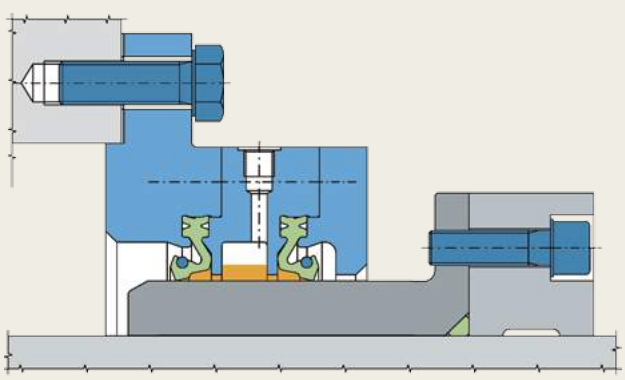

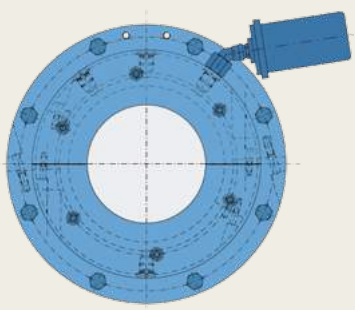

Grease lubrication by dosing unit

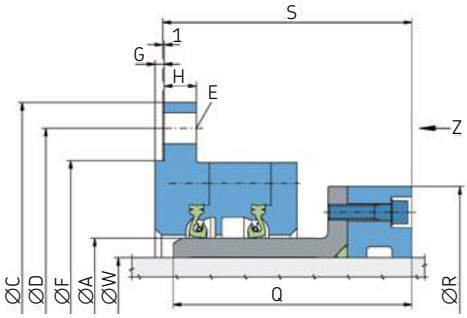

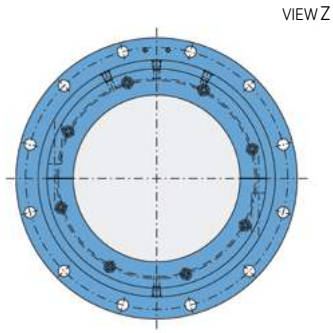

A Size	W min	W max	C	D	E	F	G	H	Q	R	S 1)	Weight 2)
mm						mm						kg
125	80	110	275	245	8 x M12	210	6	15	149	190	147	27
140	111	125	290	260	8 x M12	225	6	15	149	210	147	27
160	126	145	310	280	8 x M12	245	6	15	149	230	147	31
180	146	165	330	300	8 x M12	265	6	15	149	250	147	34
200	166	185	350	320	8 x M12	285	6	15	149	260	147	37
220	186	205	370	340	8 x M12	305	6	15	149	280	147	40
240	206	225	425	390	12 x M16	345	6	20	159	300	162	56
260	226	245	445	410	12 x M16	365	6	20	159	320	162	60
280	246	265	465	430	12 x M16	385	6	20	164	350	167	68
300	266	285	485	450	12 x M16	405	6	20	164	370	167	72
330	286	315	515	480	12 x M16	435	6	20	164	400	167	83
355	316	339	565	525	12 x M20	475	7	25	185	430	193	112
380	340	362	590	550	12 x M20	500	7	25	185	460	193	122
400	363	381	610	570	12 x M20	520	7	25	190	480	197	128
420	382	400	630	590	12 x M20	540	7	25	190	500	197	134
450	401	428	675	630	12 x M20	575	8	30	205	530	215	172
480	429	457	705	660	12 x M20	605	8	30	205	560	215	188
500	458	476	725	680	12 x M20	625	8	30	205	580	215	187
530	477	504	755	710	12 x M20	655	8	30	205	620	215	210
560	505	532	820	765	12 x M24	700	9	35	221	650	235	265
600	533	570	860	805	12 x M24	740	9	35	221	690	235	297
630	571	598	890	835	12 x M24	770	9	35	238	720	250	316
670	599	635	930	875	12 x M24	810	9	35	238	760	250	352
710	636	672	990	930	16 x M24	865	10	40	268	830	279	467
750	673	710	1 030	970	16 x M24	905	10	40	318	870	329	571
800	711	756	1 090	1 030	20 x M24	960	10	40	337	915	346	662
850	757	803	1 140	1 080	20 x M24	1 010	10	40	337	974	346	725
900	804	851	1 200	1 135	20 x M24	1 065	11	45	349	1 027	362	833
950	852	896	1 250	1 185	20 x M24	1 115	11	45	349	1 076	362	880
975	897	927	1 300	1 235	20 x M24	1 165	11	45	349	1 130	362	910
1 000	928	952	1 300	1 235	20 x M24	1 165	11	45	349	1 130	362	867
1 030	953	982	1 400	1 325	20 x M30	1 245	11	50	389	1 200	406	1 160
1 060	983	1 007	1 400	1 325	20 x M30	1 245	11	50	389	1 200	406	1 126
1 090	1 008	1 032	1 460	1 385	20 x M30	1 305	11	50	399	1 260	416	1 282
1 120	1 033	1 056	1 460	1 385	20 x M30	1 305	11	50	399	1 260	416	1 262
1 180	1 057	1 116	1 520	1 445	20 x M30	1 365	11	50	399	1 340	416	1 507
1 250	1 117	1 186	1 595	1 520	20 x M30	1 440	12	50	408	1 410	424	1 690

1) Incl. 1 mm packing 2) Weights may vary according to seal execution

Simplex Gas-tight bulkhead seal, split design (EZBS)

General description

- The Simplex Gas-tight bulkhead seal is designed for a gas- and watertight sealing of shafts, leading through bulkheads
- The standard version offered to our customers is of oil-lubricated design with an additional 15/30 l oil tank for the best cooling and lubrication
- The grease-lubricated design is supplied to vessels that have the highest circumferential shaft speeds and are equipped with automatic grease dosing units

Application

- Offshore supply vessels
- Chemical tanker
- Gas tankers

Configuration

Housing material		Liner material		Upgrades	
Cast iron	Bronze	Cast iron	Chrome steel	Adapater ring	Ex-proof design
●	○	●	○	○	○

● Available/required ○ Available on request

Oil-lubricated design

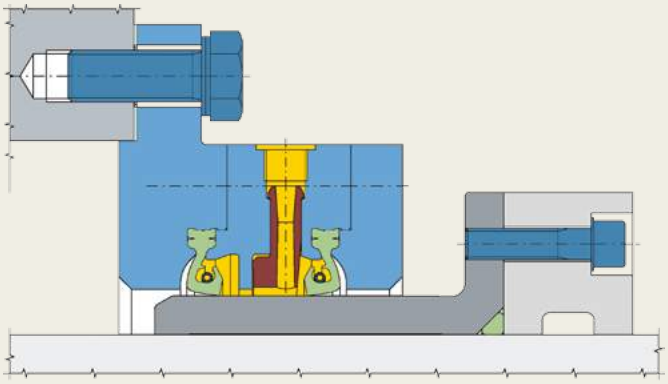

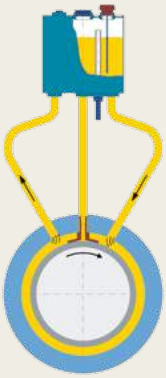

Oil lubrication by oil tank and circulator

Grease-lubricated design

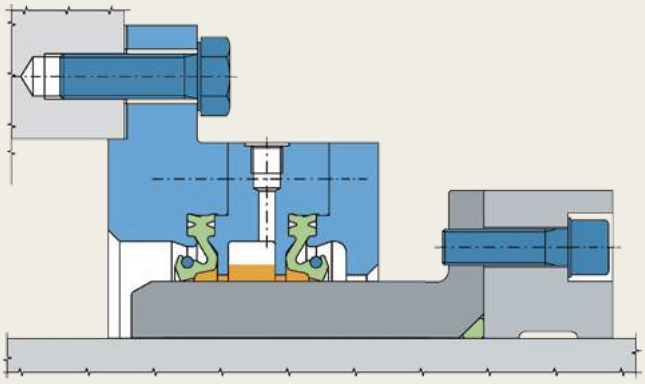

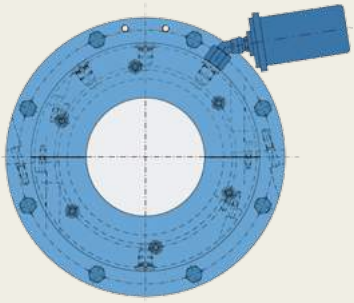

Grease lubrication by dosing unit

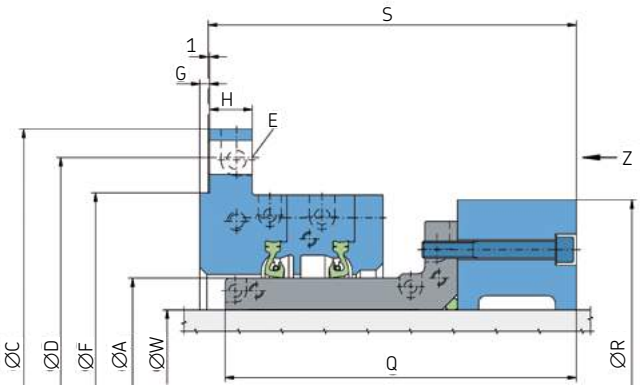

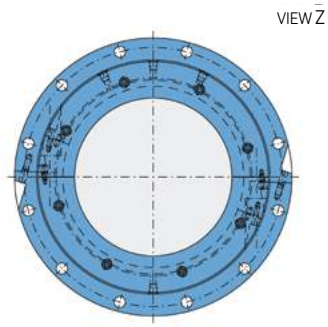

A Size	W min	W max	C	D	E	F	G	H	Q	R	S 1)	Weight 2)
mm						mm						kg
140	90	104	290	260	8 x M12	225	6	23	177	230	184	42
160	105	124	310	280	8 x M12	245	6	23	177	244	184	47
180	125	144	330	300	8 x M12	265	6	23	183	270	190	55
200	145	164	350	320	8 x M12	285	6	23	183	280	190	58
220	165	184	370	340	8 x M12	305	6	23	196	320	203	72
240	185	204	425	390	12 x M16	345	6	24	211	340	220	92
260	205	224	445	410	12 x M16	365	6	24	211	360	220	99
280	225	244	465	430	12 x M16	385	6	24	211	376	220	105
300	245	264	485	450	12 x M16	405	6	24	211	392	220	111
330	265	294	515	480	12 x M16	435	6	24	230	436	239	141
355	295	319	565	525	12 x M20	475	7	30	248	466	260	178
380	320	344	590	550	12 x M20	500	7	30	248	490	260	190
400	345	364	610	570	12 x M20	520	7	30	248	510	260	195
420	365	384	630	590	12 x M20	540	7	30	248	522	260	200
450	385	415	675	630	12 x M20	575	8	30	279	530	295	239
480	416	445	705	660	12 x M20	605	8	30	279	560	295	253
500	446	464	725	680	12 x M20	625	8	30	279	580	295	252
530	465	494	755	710	12 x M20	655	8	30	279	620	295	288
560	495	523	820	765	12 x M24	700	9	35	317	670	334	380
600	524	558	860	805	12 x M24	740	9	35	319	704	334	419
630	559	588	890	835	12 x M24	770	9	35	319	736	334	433
670	589	628	930	875	12 x M24	810	9	35	391	790	406	578
710	629	662	990	930	16 x M24	865	10	40	425	834	440	705
750	663	702	1 030	970	16 x M24	905	10	40	425	868	440	747
800	703	752	1 090	1 030	20 x M24	960	10	40	475	940	491	959
850	753	801	1 140	1 080	20 x M24	1 010	10	40	475	986	491	1 011
900	802	851	1 200	1 135	20 x M24	1 065	11	45	489	1 030	512	1 126
950	852	901	1 250	1 185	20 x M24	1 115	11	45	567	1 116	590	1 483
1 000	902	950	1 300	1 235	20 x M24	1 165	11	45	567	1 166	590	1 561

1) Incl. 1 mm packing 2) Weights may vary according to seal execution

Simplex Upper rudder stock seal, SC3

General description

- Rudder stock seal exclusively for sealing rudder stock shafts against oil leakage or water ingress
- Upper rudder stock seal → located at the upper end of the rudder shaft, installed at the top of the rudder stock trunk → operating in the steering gear room
- Split housing rings available on request

Function

- The stationary housing with seal rings V1 and V2 is mounted on top of the coker unit.
- The liner (5) rotates with the rudder stock.
- The housing consists of individual rings (1), (2) and (3), which are bolted together.
- Sealing rings V1 and V2 face oil or seawater in the rudder stock.
- To protect the sealing rings V1 and V2 of the rudder stock seal against dirt from the steering gear room, the space between cover ring (3) and the rudder stock is sealed using cotton packing (4).

Housing material:

- Bronze
- Cast iron

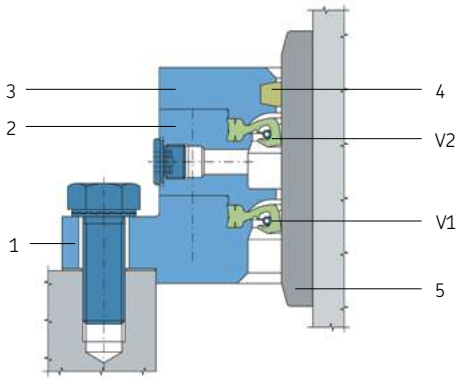

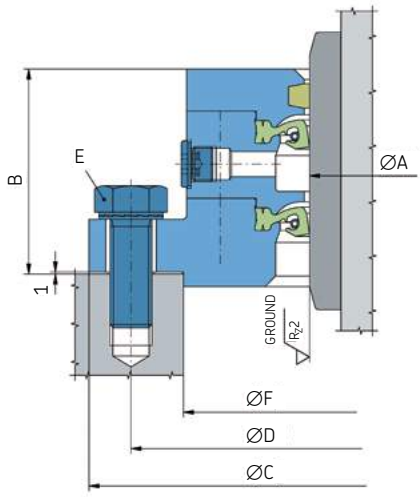

A Size	B [1]	C	D	E	F	Weight
mm						kg
140	77	290	260	8 x M12	225	14
160	77	310	280	8 x M12	245	16
180	77	330	300	8 x M12	265	17
200	77	350	320	8 x M12	285	18
220	77	370	340	8 x M12	305	20
240	85	425	390	12 x M16	345	32
260	85	445	410	12 x M16	365	34
280	85	465	430	12 x M16	385	36
300	85	485	450	12 x M16	405	38
330	85	515	480	12 x M16	435	41
355	98	565	525	12 x M20	475	60
380	98	590	550	12 x M20	500	64
400	98	610	570	12 x M20	520	66
420	98	630	590	12 x M20	540	69
450	111	675	630	12 x M20	575	89
480	111	705	660	12 x M20	605	94
500	111	725	680	12 x M20	625	97
530	111	755	710	12 x M20	655	102
560	120	820	765	12 x M24	700	137
600	120	860	805	12 x M24	740	145
630	120	890	835	12 x M24	770	151
670	120	930	875	12 x M24	810	159
710	134	990	930	16 x M24	865	210
750	134	1 030	970	16 x M24	905	220
800	143	1 090	1 030	20 x M24	960	251
850	143	1 140	1 080	20 x M24	1 010	265
900	153	1 200	1 135	20 x M24	1 065	312
950	153	1 250	1 185	20 x M24	1 115	327
1 000	153	1 300	1 235	20 x M24	1 165	342

[1] Incl. 1 mm packing

Simplex Lower rudder stock seal, SC3

General description

- Rudder stock seal exclusively for sealing oscillating rudder stock shafts against oil or water ingress
- Lower rudder stock seal → located at the lower end of the rudder shaft, installed at the bottom of the rudder stock trunk → operating in the seawater
- Split housing rings available on request

Function

- The stationary housing with seal rings V1 and V2 is mounted at the bottom of the rudder stock trunk.
- The liner (5) oscillates with the rudder stock.
- The housing consists of individual rings (1), (2) and (3), which are bolted together.
- The sealing ring V1 faces the rudder stock trunk, the sealing ring V2 faces the seawater.

Housing material:

- Bronze
- Cast iron

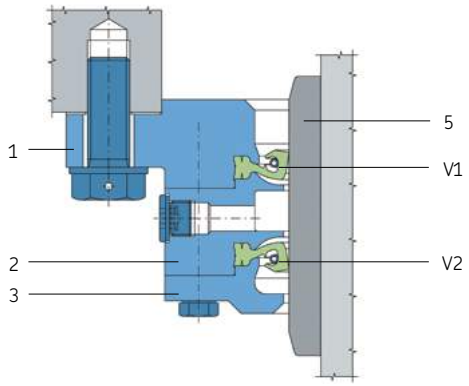

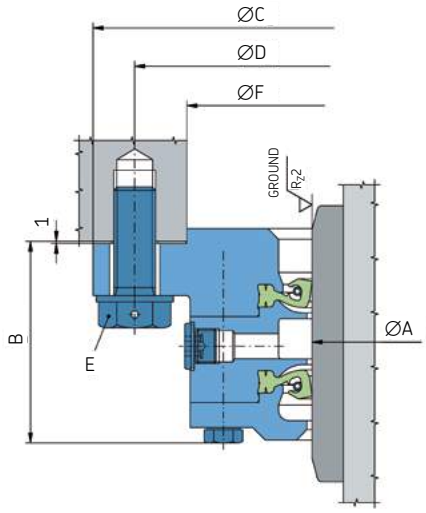

A Size	B [1]	C	D	E	F	Weight
mm						kg
140	73	290	260	8 x M12	225	13
160	73	310	280	8 x M12	245	14
180	73	330	300	8 x M12	265	16
200	73	350	320	8 x M12	285	17
220	73	370	340	8 x M12	305	18
240	84	425	390	12 x M16	345	29
260	84	445	410	12 x M16	365	31
280	84	465	430	12 x M16	385	33
300	84	485	450	12 x M16	405	35
330	84	515	480	12 x M16	435	38
355	96	565	525	12 x M20	475	56
380	96	590	550	12 x M20	500	59
400	96	610	570	12 x M20	520	62
420	96	630	590	12 x M20	540	64
450	109	675	630	12 x M20	575	83
480	109	705	660	12 x M20	605	87
500	109	725	680	12 x M20	625	90
530	109	755	710	12 x M20	655	95
560	120	820	765	12 x M24	700	129
600	120	860	805	12 x M24	740	136
630	120	890	835	12 x M24	770	142
670	120	930	875	12 x M24	810	150
710	136	990	930	16 x M24	865	200
750	136	1 030	970	16 x M24	905	209
800	146	1 090	1 030	20 x M24	960	239
850	146	1 140	1 080	20 x M24	1 010	252
900	155	1 200	1 135	20 x M24	1 065	295
950	155	1 250	1 185	20 x M24	1 115	309
1 000	155	1 300	1 235	20 x M24	1 165	323

[1] Incl. 1 mm packing

Simplex Lower rudder stock seal in the coker, SC3

General description

- Rudder stock seal exclusively for sealing oscillating rudder stock shafts against oil or water ingress
- Lower rudder stock seal → located at the lower end of the rudder shaft, installed at the bottom of the rudder stock trunk → operating in the seawater
- Split housing rings available on request

Function

- The stationary housing with seal rings V1 and V2 is mounted inside the coker unit at the bottom.
- The liner (5) oscillates with the rudder stock.
- The housing consists of individual rings (1), (2), (3), which are bolted together.
- The sealing ring V1 is faces the rudder stock trunk, the sealing ring V2 faces the seawater.

Housing material:

- Bronze
- Cast iron

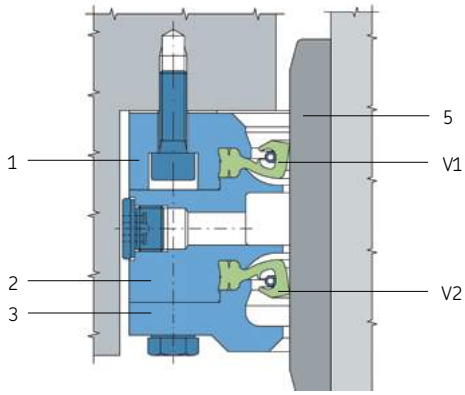

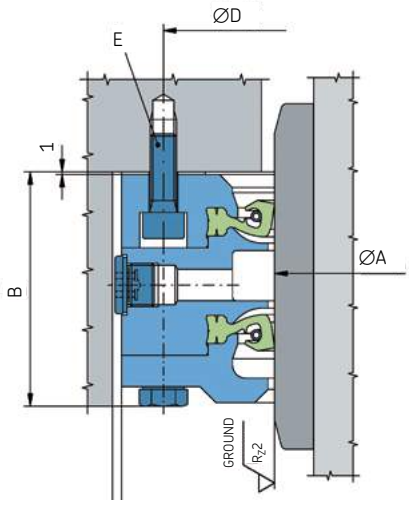

A Size	B [1]	C	D	E	F	Weight
mm						kg
140	74	222	202	6 x M6	226	9
160	74	242	222	6 x M6	246	10
180	74	262	242	6 x M6	266	11
200	74	282	262	6 x M6	286	12
220	74	302	282	6 x M6	306	13
240	81	341	315	8 x M8	345	20
260	81	361	335	8 x M8	365	21
280	81	381	355	8 x M8	385	22
300	81	401	375	8 x M8	405	24
330	81	431	405	8 x M8	437	26
355	92	472	440	8 x M10	478	37
380	92	497	465	8 x M10	503	39
400	92	517	485	8 x M10	527	41
420	92	537	505	8 x M10	547	43
450	98	572	540	10 x M10	582	51
480	98	602	570	10 x M10	612	54
500	98	622	590	10 x M10	632	56
530	98	652	620	10 x M10	662	58
560	107	697	661	10 x M12	707	76
600	107	737	701	10 x M12	747	80
630	107	767	731	10 x M12	777	84
670	107	807	771	10 x M12	817	89
710	122	862	821	12 x M16	872	120
750	122	902	861	12 x M16	912	126
800	132	957	916	16 x M16	967	150
850	132	1 007	966	16 x M16	1 017	158
900	141	1 062	1 021	16 x M16	1 072	183
950	141	1 112	1 071	16 x M16	1 122	192
1 000	141	1 162	1 121	20 x M16	1 172	201

[1] Incl. 1 mm packing

Simplex Intermediate shaft bearing pedestal type

General description

- Oil-lubricated shaft bearing available for a wide range of applications
- Standard design
  - Housing: EN-GJL-250 (GG-25) cast iron
  - Bearing shell: lead or tin-based white metal
  - Self-lubricating under standard design
- Supplied as standard with a Pt 100 temperature sensor
- Designed for easy installation and alignment

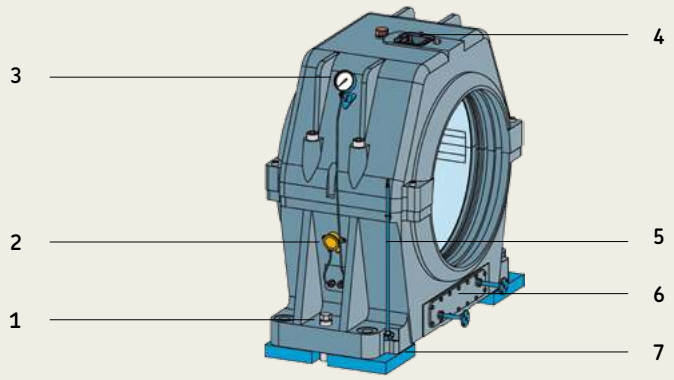

Configuration

	Standard	Option
1 **Adjusting screw** – Exact positioning and alignment during installation	●	
2 **Remote temperature sensor Pt100 junction box** – Connection to the ship's central alarm system	●	
3 **Dial thermometer, case-mounted**	●	
Dial thermometer, wall-mounted		●
4 **Transparent cover** – Convenient visual inspection	●	
5 **Dipstick** – For lube oil level measurement	●	
6 **Cooling coil**	●	
7 **Chock liner**	●	
• **External oil unit for hydrostatic lubrication**		●
• **Direct forced lubricating oil connection** – For additional lube oil supply		●

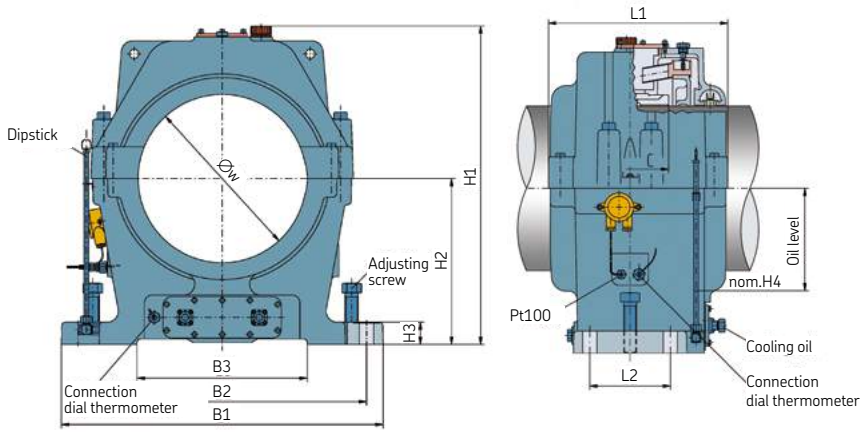

Size	W Shaft min	W Shaft max	Foun-dation bolts	B1	B2	B3	C	H1	H2	H3	H4	L1	L2	Oil filling	Weight min[1)]
	mm			mm										approx. litre	kg
240	201	240						Dimensions and weights on request							
280	241	280	4 x M30	650	580	290	150	677	330	40	200	343	170	9	300
330	281	330	4 x M30	750	670	340	170	747	365	50	219	370	190	10	310
390	331	390	4 x M30	770	694	400	190	785	400	50	258	452	190	12	410
450	391	450	4 x M36	870	780	460	210	862	450	60	280	490	220	13	560
510	451	510	4 x M36	980	880	520	240	934	480	70	310	514	210	24	660
570	511	570	4 x M42	1 030	920	580	270	980	500	70	345	580	260	26	710
650	571	650	4 x M42	1 120	1 000	660	300	1 110	570	85	395	615	260	31	1060
740	651	740	4 x M45	1 300	1 170	750	350	1 261	670	100	430	690	360	50	1600
840	741	840	4 x M48	1 480	1 350	850	460	1 421	750	120	505	803	430	86	2400
940	841	940						Dimensions and weights on request							
1 040	941	1 040						Dimensions and weights on request							

1) Weights may vary depending on the configuration and shaft diameter

Bearing shell type :
Plummer block

Bearing shell type :
Tunnel bearing

Simplex Intermediate shaft bearing with forced lubrication

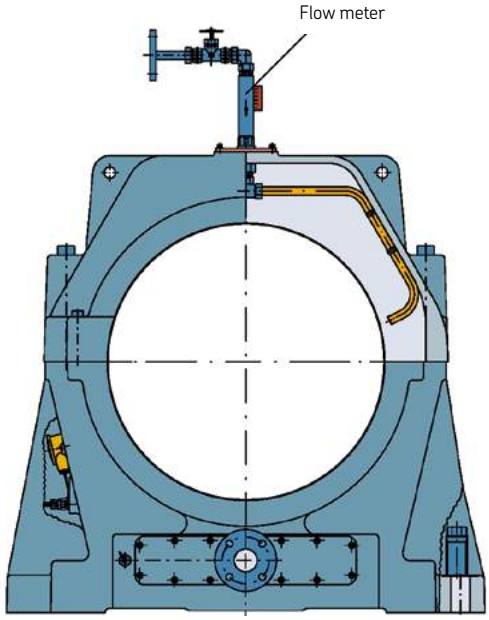

- The oil supply through an external system including all piping installations needs to be carried out by the yard.

Simplex Intermediate shaft bearing with hydrostatic jack-up unit

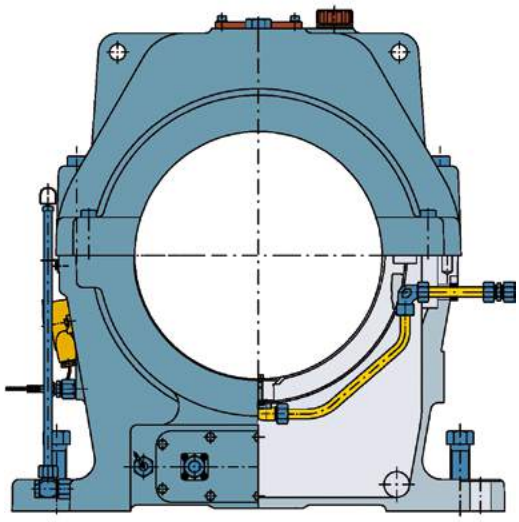

- The shaft is jacked-up by hydraulic pressure to minimize wear especially at low shaft revolutions or when wear is stated as critical in particular applications.
- The oil ring (self-lubricating properties) remains. A separate pump in oil circulation required.

Chocking

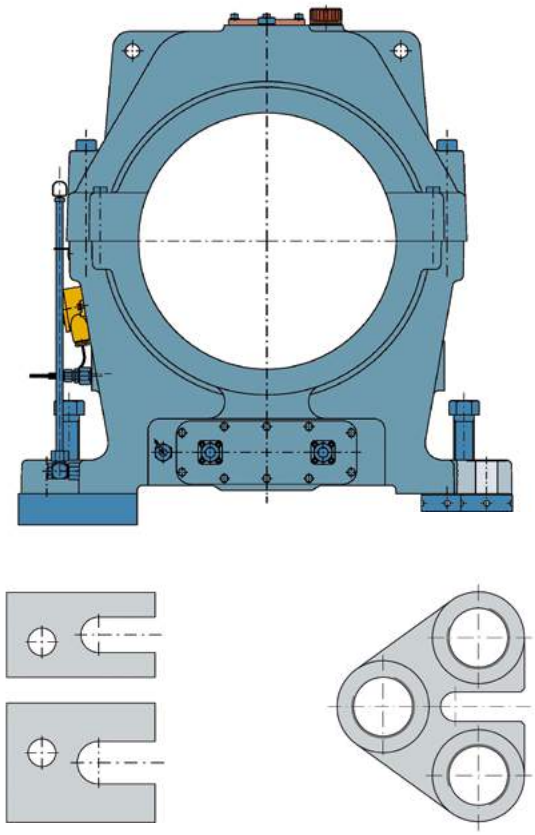

- Standard mounting of all Simplex Intermediate shaft bearings with chock liner.
- Optional mounting of Simplex Intermediate shaft bearings with SKF Vibracons up to size 570.
- Alternative chocking method, casting with epoxy resin. This needs to be executed by certified service supplier.

Simplex Intermediate shaft bearing saddle type

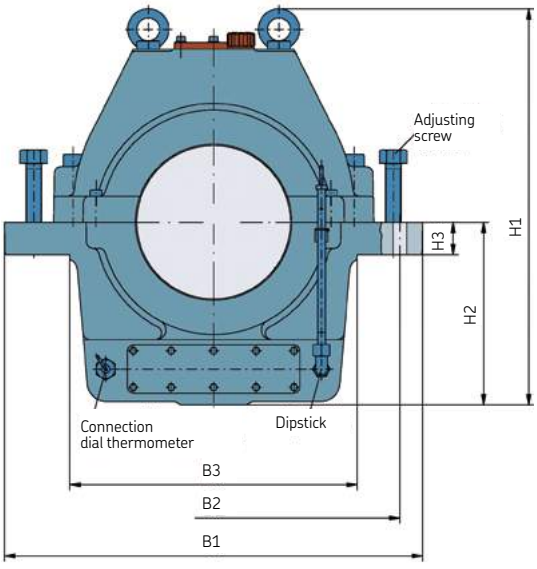

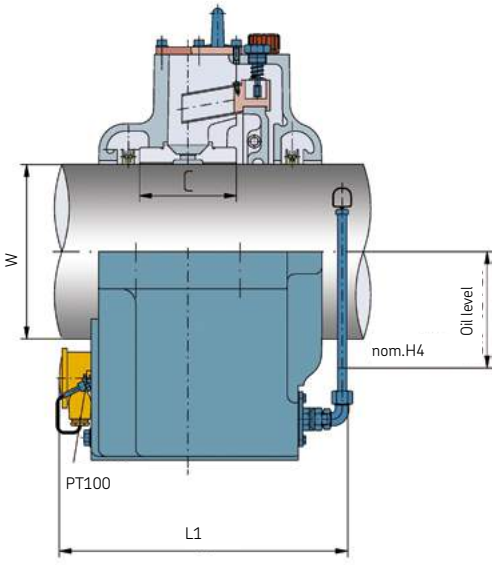

Size	W Shaft min	W Shaft max	Foun-dation bolts	B1	B2	B3	C	H1	H2	H3	H4	L1	L2	Oil filling	Weight min[1)]
				mm										approx. litre	kg
240	201	240	4 x M24	640	570	440	130	607	280	50	173	397	130	5,5	280
280	241	280	4 x M30	700	630	500	150	677	330	50	205	444	150	9	300
330	281	330	4 x M30	825	720	560	170	785	365	80	222	474	180	10	310

1) Weights may vary depending on the configuration and shaft diameter

Simplex Intermediate shaft bearing – safe return to port (SRTP)

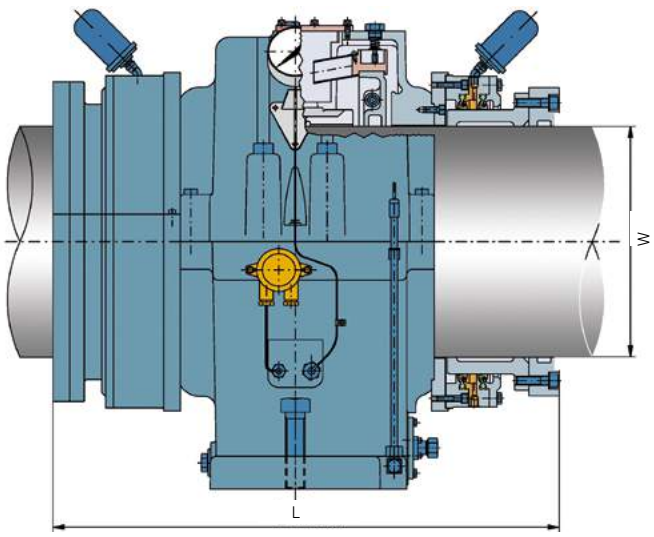

- Designed in accordance with SOLAS regulations. Bearing is protected by Simplex seals on both ends, to ensure SRTP operation if the compartment becomes flooded.
- For pedestal type as well as for saddle type bearings.

Size	W Shaft min	W Shaft max	L Dimensions	Weight min
			mm	kg
280	241	280	575	The weights consist of the sealing and the corresponding intermediate shaft bearing.
330	281	330	625	
390	331	390	750	
450	391	450	785	
510	451	510	840	
570	511	570	910	
650	571	650	1 050	
740	651	740	1 170	
840	741	840	1 305	

Simplex High-load thrust bearing

General description

- Single-collar thrust bearing to take up thrust loads
- Temperature sensor (Pt 100) fitted at the upper thrust pads in both thrust directions
- The thrust pads can be replaced or inspected through top cover without dismantling the housing or the shaft

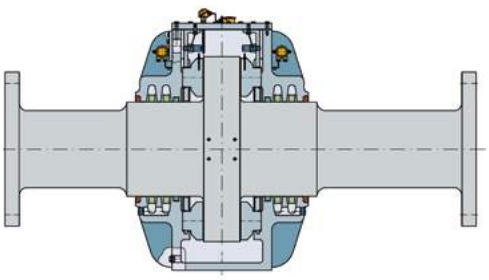

Axial thrust bearing

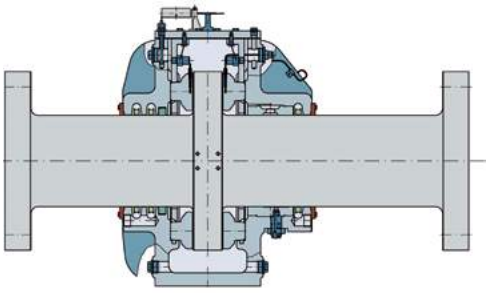

Axial and radial thrust bearing with hydrostatic jack-up unit

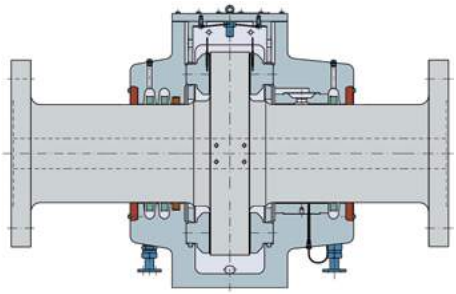

Axial and radial thrust bearing

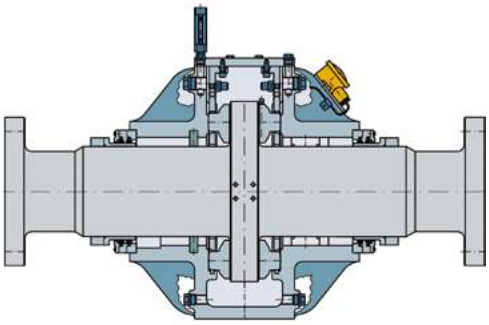

Axial and radial thrust bearing with safe return to port (SRTP) seals

Configuration

	Standard	Option
• **Resilient foundation –** Damping of vibrations and shock effects		●
• **Remote temperature sensor (Pt100) junction box –** Connection to the ship's central alarm system	●	
• **Adjusting screw –** Exact positioning and alignment during installation	●	
• **Removable cover –** Convenient inspection and change of thrust pads	●	
• **Compliance with the SOLAS rules (safe return to port - SRTP) achieved using the Simplex seal system for bearings**		●
• **Lubrication unit with pressure sensor**		●
• **Approved shock design**		●
• **Integrated radial bearing shell up to shaft diameter 500**	●	
• **Hydrostatic oil support for radial bearing shell –** Realization of individual customer requirements		●
• **External oil unit for hydrostatic lubrication**		●

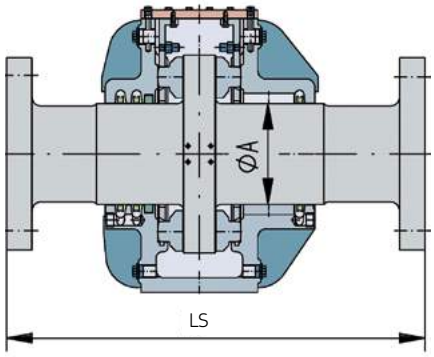

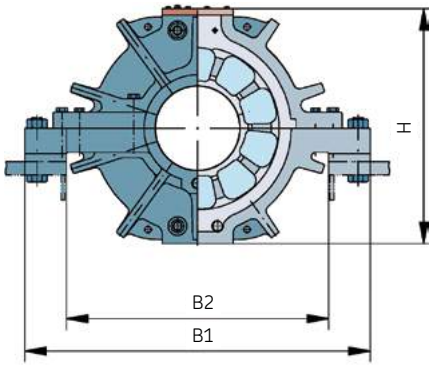

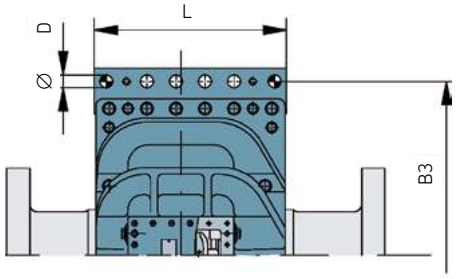

The choice of the most suitable thrust bearing is based on hydrodynamic calculations, applicable class requirements, prevailing operating conditions and special customer requirements

Size	D Rough drilled foundation hole	H Overall height	B1 Overall width	L Foundation length	B2 max Foundation width	B3 Foundation hole spacing	FN max nominal thrust at MCR [1]	m Bearing weight without shaft	LS Standard shaft length	Standard shaft weight	Arrangement	
mm							kN	kg +/-10 %	mm	kg	Standard	Option
180	23	545	730	405	556	680	200	265	1 000	300	R/2 A R/2	A, AR, RA
200	23	595	790	450	616	744	260	370	1 100	410		
225	32	651	940	485	704	870	330	540	1 200	565		
250	32	724	1 030	535	784	964	420	745	1 300	755	AR	A
280	38	806	1 160	580	890	1 080	530	1 035	1 450	1 060		
315	44	874	1 290	662	980	1 200	680	1 490	1 600	1 475		
355	50	956	1 430	722	1 080	1 330	870	2 020	1 800	2 120		
400	54	1 050	1 610	800	1 220	1 510	1 110	2 765	1 950	2 935		
450	60	1 250	1 500	960	1 060	1 280	1 420	3 790	2 100	3 950		
500	60	1 260	1 840	1 030	1 360	1 710	1 820	3 250	2 400	5 450		
560	74	1 440	2 000	1 040	1 520	1 850	2 330	4 100	2 700	7 550	A	R/2 A R/2, R/2 A, A R/2
630	80	1 650	2 260	1 155	1 700	2 106	2 970	6 500	3 000	10 950		
710	93	1 870	2 660	1 310	1 960	2 480	3 800	10 000	3 400	16 420		
800	103	2 060	2 890	1 430	2 180	2 690	4 850	14 400	3 800	22 520		
900	98	2 365	3 210	1 770	2 440	3 000	6 200	23 300	4 300	32 540		
1 000	113	2 675	3 550	2 030	2 720	3 300	7 930	33 000	4 800	44 500		

[1] The allowable nominal thrust is subject to hydrodynamic calculation. The stated figures are permissible at a specific shaft speed, suitable oil viscosity and moderate ambient temperatures. Other thrust figures, for example crash stop or response thrust, to be provided on request.

A With axial load

AR With axial load and radial bearing shell

R/2 Small radial bearing shell

R With radial bearing shell

RA With radial bearing shell and axial load

Simplex Sterntube bushes

General description

- Available in different material combinations of bushes and white metal lining
- Pt -100 flexible temperature sensors for remote monitoring
- Offset, slope or double slope implemented according to requirements

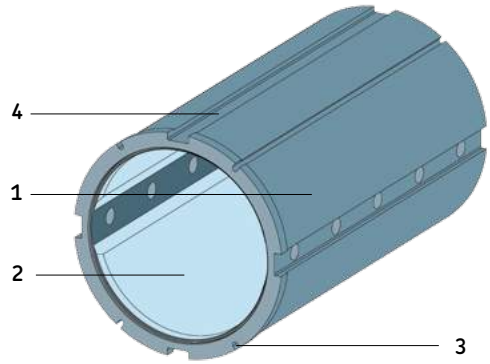

Configuration

	Standard	Option
1 **Bush: EN-GJL-200 (GG-20) cast iron** (design mainly for merchant shipping)	●	
Bush: EN-GJS-400-15 (GGG-40) spheroidal cast iron (design for higher stresses, e.g. naval ships or icebreakers)		●
2 **Lining: lead-based white metal**	●	
Lining: tin-based white metal		●
3 **Groove for temperature sensor**	●	
Additional groove for temperature sensor		●
4 **Larger grooves for oil/air routing oil/air pipes in the 12 and 6 O'clock positions**		●
• **Hydrostatic lubrication** – including oil unit		●
• **Special design for twin screw vessels**		●

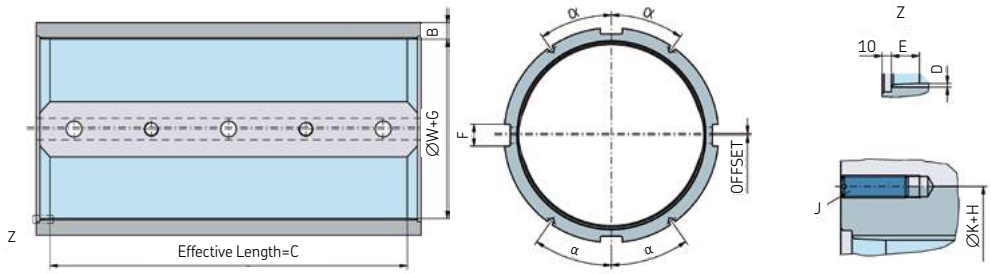

W min	W max	B	D	E	F	G Nominal clearance	H Interference	J Securing screw
mm								
101	200	28	2	10	40	0.5 +0.05	+0.02/+0.03	2xM16x50
201	300	33	2	15	40	0.6 +0.05	+0.02/+0.03	2xM16x50
301	400	38	3	20	50	0.7 +0.05	+0.03/+0.05	2xM20x60
401	500	43	3	25	50	0.8 +0.15	+0.03/+0.05	2xM20x60
501	600	48	4	30	63	0.9 +0.15	+0.03/+0.05	2xM20x60
601	700	53	4	35	63	1.0 +0.15	+0.03/+0.05	2xM20x60
701	800	58	4	40	63	1.2 +0.2	+0.04/+0.06	2xM20x60
801	900	63	4	45	63	1.3 +0.2	+0.04/+0.06	2xM20x60
901	1 000	68	4	50	63	1.4 +0.2	+0.04/+0.06	2xM20x60
1 001	1 100	73	4	55	63	1.5 +0.2	+0.04/+0.06	2xM20x60

C=Effective bush length "C", taking into consideration the special rules of classification societies
aft bush 1.5-2 W, fwd bush 0.5 -0.8 W

Shaft tolerance required: h6, h7
Shaft journal surface roughness: Rz6,3

Taking into account the tolerance quoted in the table, the pressing-in force can be determined according to the following formula:

Fitting force in Newton

$$Ff = \frac{\pi \quad E_1 \quad \mu}{2} \quad L_1 \quad \left[1 - \left(\frac{d}{D_1} \right)^2 \right] \quad U$$

E1 = EN - GJL - 200 (GG - 20) = 100 000 - 120 000 N/mm²
EN-GJS - 400 - 15 (GGG - 40) = 170 000 N/mm²
μ = (GS / GG) = 0.16 - 0.20
(GG / GG) = 0.22 - 0.26
d = Inside diameter of the sterntube bush
D1 = Outside diameter of the sterntube bush
L1 = Total length of the carrying outside diameter of the sterntube bush
α = value depends on the aft seal design

Simplex Sterntube bush in bush

General description

- Flange pitch circle diameter (PCD) according to Simplex seal standard dimension for direct mounting
- Sterntube bush fitted in a steel sleeve to be casted by epoxy resin
- Machined with the interface for Simplex seals
- Available in different material combinations of bushes and white metal lining

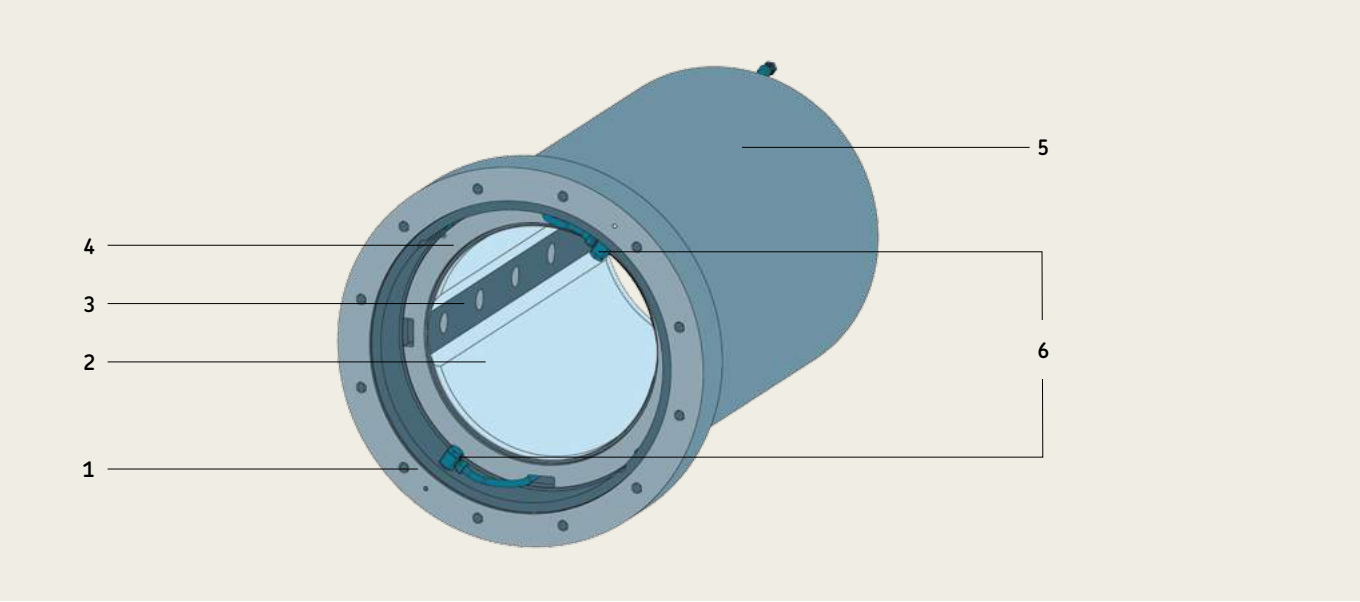

Configuration

	Standard	Option
1 **Adapter flange ring (fwd and aft)** – For a precise seal connection	●	
2 **White metal, lead-based**	●	
White metal, tin-based		●
3 **Oil grooves straight-aligned** – Constant and reliable lube oil supply	●	
4 **Material bush design EN-GJL-200 (GG-20) cast iron** – Mainly for merchant shipping	●	
Material bush design EN-GJS-400-15 (GGG-40) spheroidal cast iron – For higher stresses		●
5 **Final fixing of the complete bush-in-bush system with epoxy resin**	●	
6 **Supply lines – Air/oil supply for the aft seal, sterntube drain and lubrication**		●
• **Flexible temperature sensors (Pt 100)**	●	
• **Hydrostatic lubrication**		●

Simplex Sterntube bush in bush

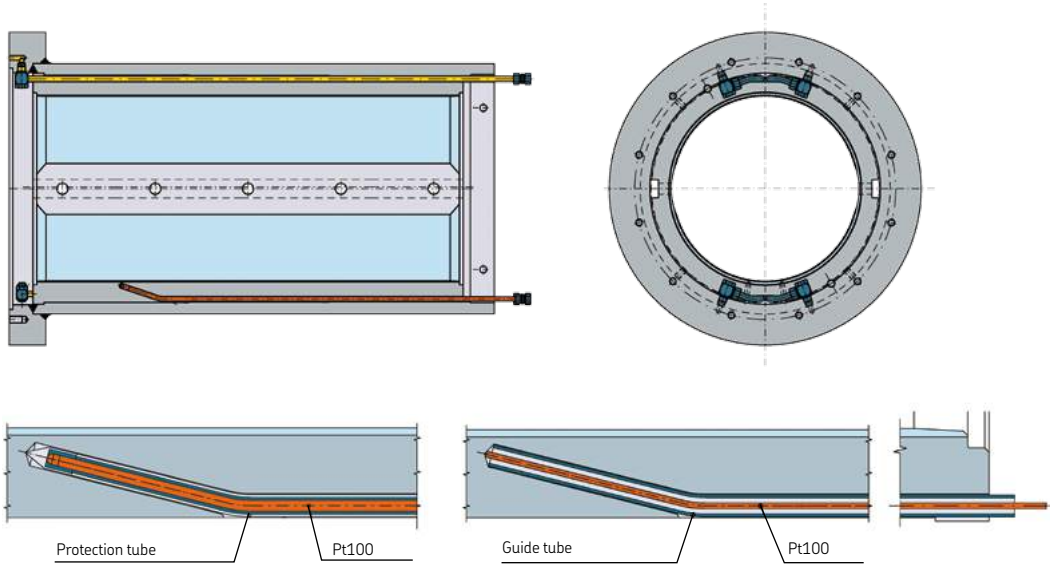

Pt100 temperature sensor, exchangeable from the engine room during vessel operation (standard).

Pt100 temperature sensor with fixed installation, exchangeable in the shipyard.

Simplex Sterntube bush with hydrostatic jack-up

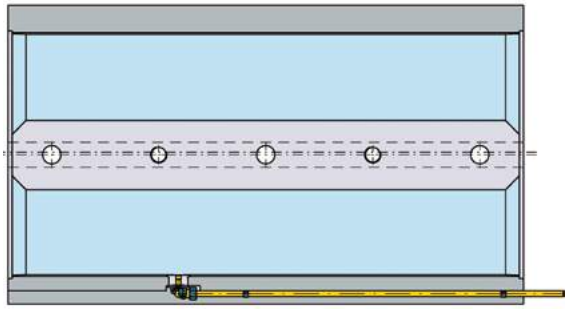

The shaft is jacked-up by hydraulic pressure to minimize wear especially at low shaft revolutions, steady reversed sense of rotation or when wear is stated as critical in particular applications. The hydrostatic jack-up bush can be used for sterntube and bush in bush solutions.

Simplex SternTube and FlexiTube

General description

- Complete sterntube system
- Turnkey solution ready for installation
- Certified by all major classification societies
- Customized modular design for all vessel types and sizes

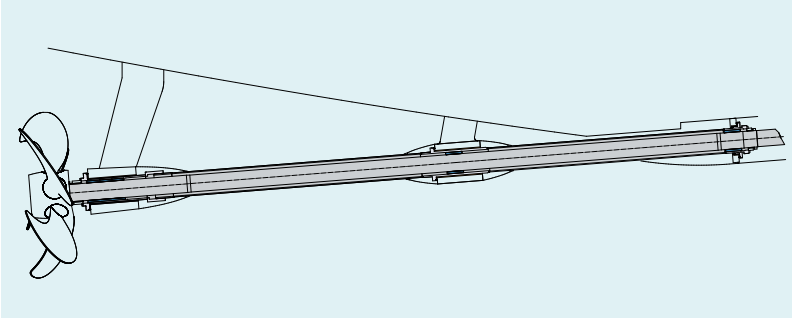

Configuration

	SternTube	FlexiTube
1 **Flange ring (fwd and aft)** for seal connection	●	●
2 **Final fixing** of the complete sterntube with **epoxy resin**	●	●
3 **Pre- installed pipes and temperature sensors**	●	●
4 **De-/inflatable seal and venting system** for epoxy resin	●	●
5 **Adjustment angle set** (fwd and aft)	○	●
6 **Flexible connecting ring** at the fwd part (bulkhead)	○	●
7 **Welding ring** (split or non-split) **with O-ring**	●	○

● Available/required ○ Available on request

To generate an initial customized technical drawing, the following data are required:

- Type of hull
- Sterntube length
- Diameter of the propeller shaft

Simplex SternTube designed for conventional applications

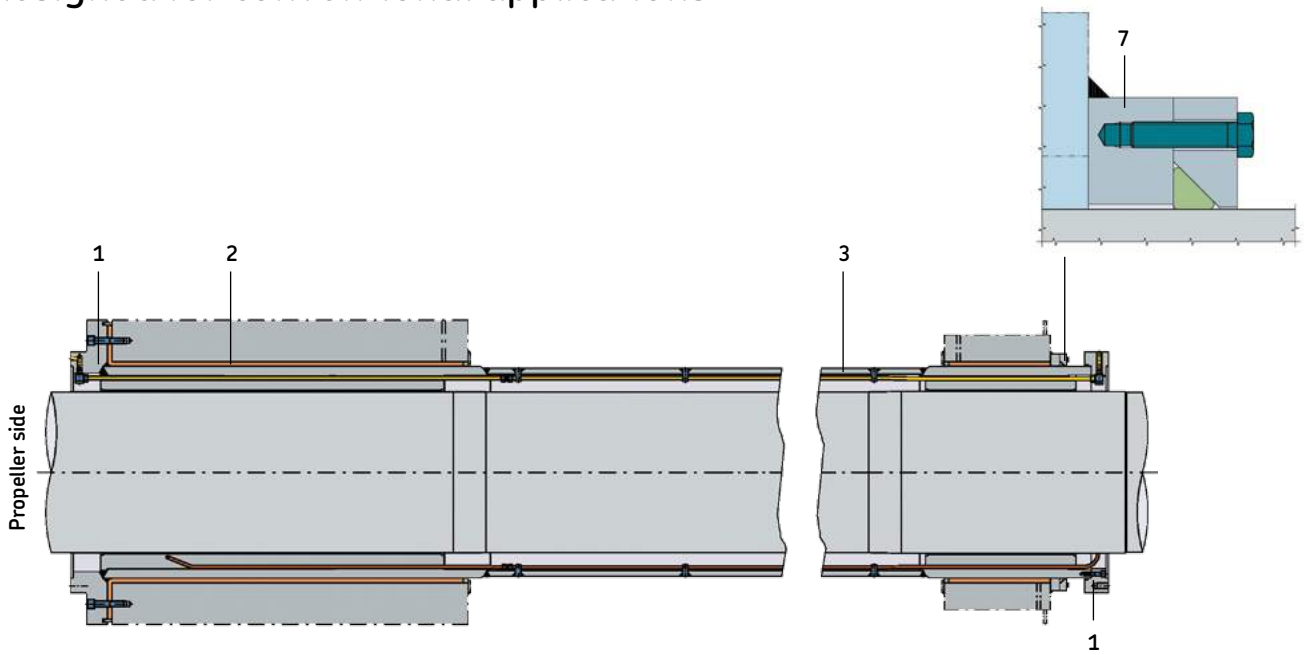

Adjustment angle set (option)

- for a precise alignment of the sterntube before final fixing

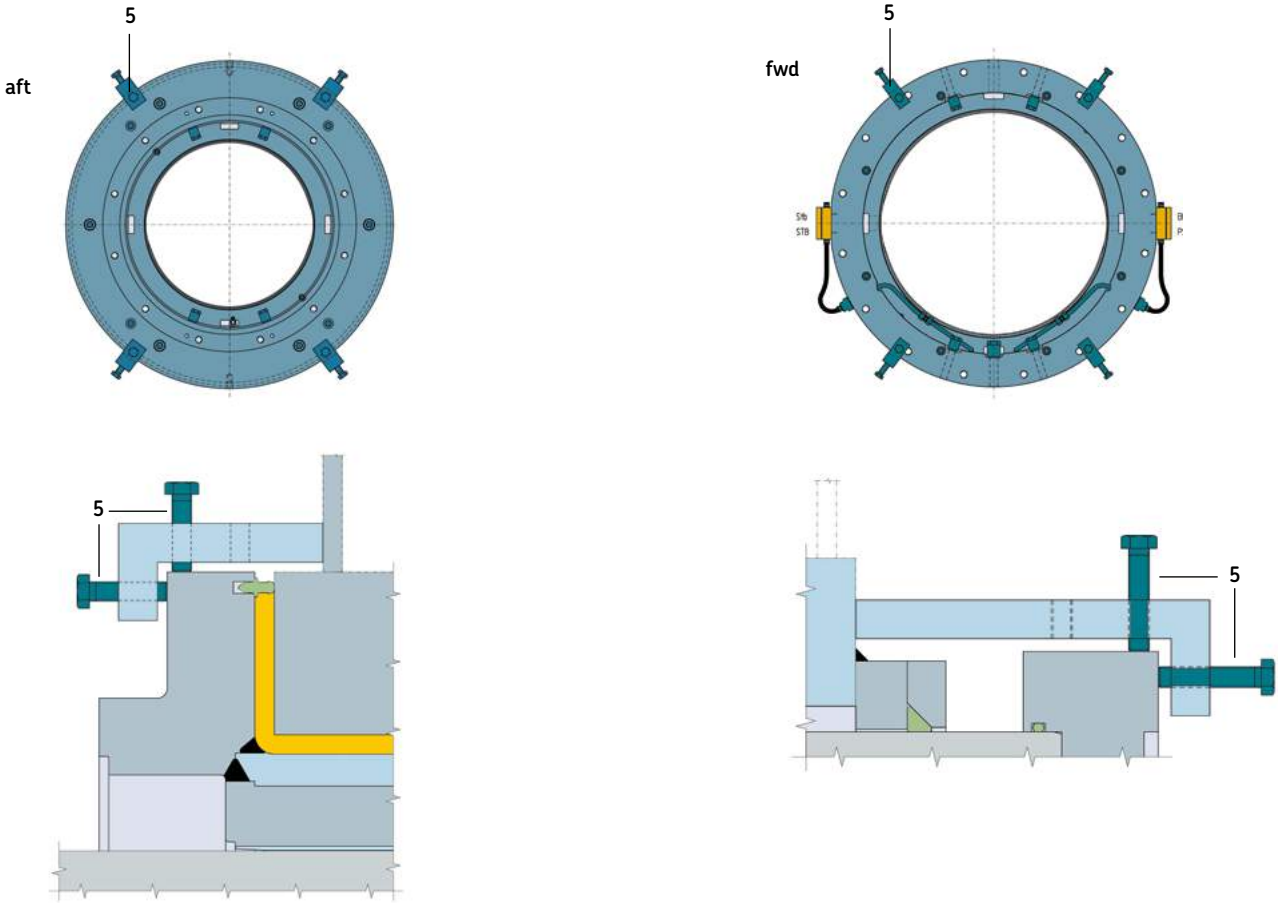

Simplex FlexiTube
designed for conventional applications

Fwd connecting ring with axial flexibility to permit thermal sterntube expansion and most easy installation

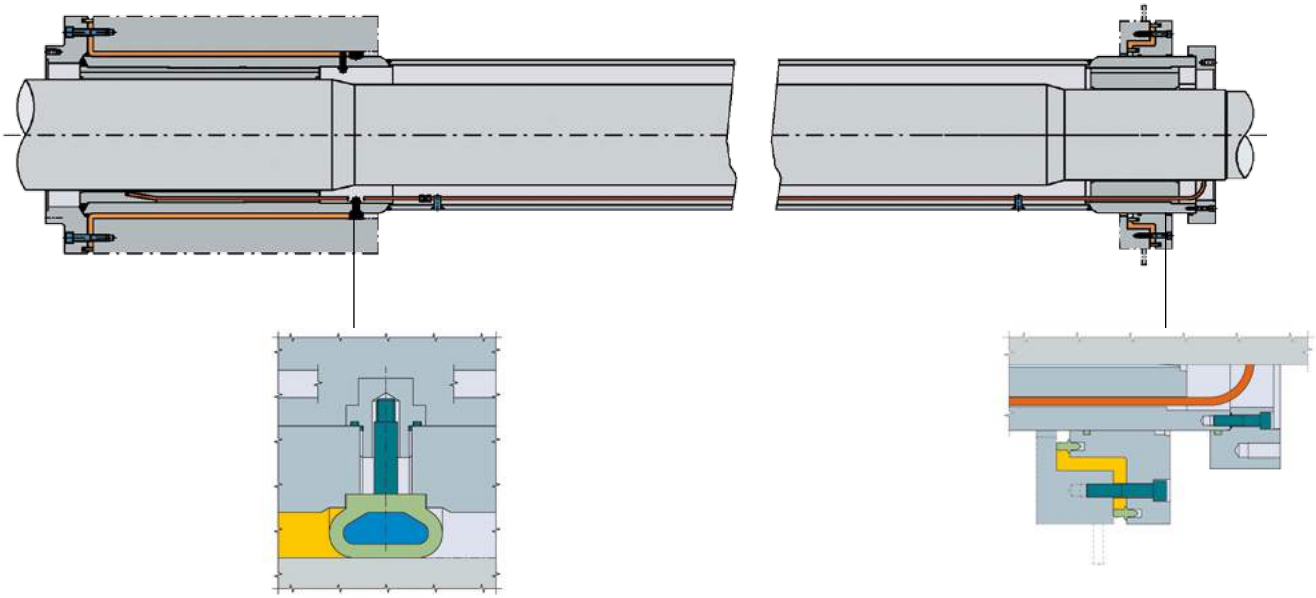

Simplex FlexiTube R type or SR type
designed for vessels with one or two shaft struts

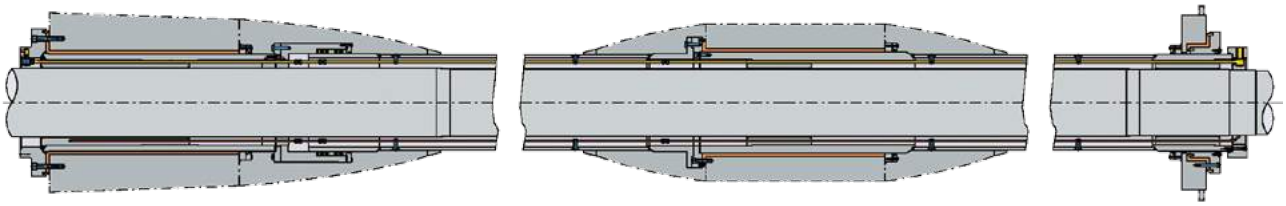

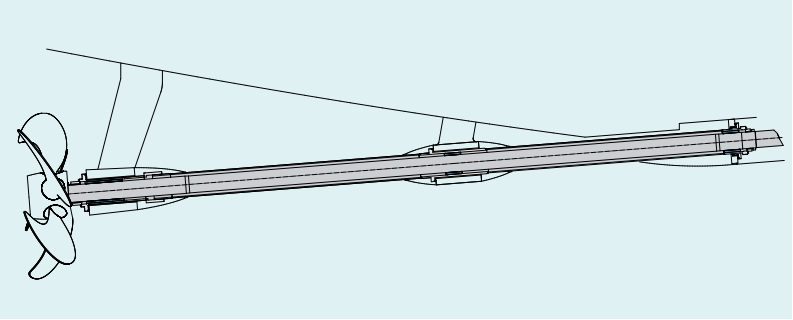

Simplex service and spare parts

The feel-good factor of always being able to rely on someone.

We provide support for your ship throughout its life cycle – taking care of it every step of the way with professional planning, regular dockings, emergency servicing and quality spare parts. Our comprehensive service for Simplex shaft components, e.g. sterntube seals, bushes, tunnel bearings and plummer blocks, ensures that your vessel is optimally equipped, maintained and always ready for operation – worldwide and 24/7.

- Worldwide sales and service network for maritime customers
- Qualified service stations with trained and certified experts
- Highly professional staff for efficient service and customer support
- Central warehouse in Hamburg plus two more in Singapore and Shanghai
- Short notice production of spare parts: 98% of already delivered parts can be reproduced within a very short time

Available around the world, highly qualified and fast – that's the Simplex sales and service network.

Your emergency contact for service and spare parts

Phone: + 49 172 437 47 78
E-mail: service@skf-marine.com

Find your local contact:

skf-simplex.com

Available around the world, highly qualified and fast – that's the Simplex sales and service network.

Manufacture, sales and service:
SKF Marine
Hermann-Blohm-Straße 5
20457 Hamburg, Germany
sales@skf-marine.com
service@skf-marine.com
Phone: +49 40 3011-0

skf.com | skf-marine.com | skf-simplex.com

PUB 43/P1 17396 EN · May 2017